ANALOG METER

selec®

Voltage
300V
500V
600V

Current : CT Type
15 to 4000A

Current : Direct Type
10 to 100A

Power Factor
440V / 415V

Frequency
220V / 440V

CE | RoHS

Features:

- IEC 60051-2
- UL 94 V-0 approved glass filled polycarbonate casing
- Self-extinguishing plastic
- True RMS measurement
- Scale interchangeability (Ammeter)
- Linear / Non-linear scales
- Suppressed scales (Ammeter)

Available in Sizes : 96x96mm & 72x72mm

www.selec.com

ANALOG METERS

AM - V

AM - Power Factor

AM - Frequency

Technical Specification

Accuracy	Class 1.5	Class 1.5	Class 1
Measured Parameters	AC Voltage	Power Factor	Frequency
Measuring Voltage Range	300V / 500V / 600V	45° - 0° - 45°	45 to 65 Hz
Overload Capacity Continuously	1.2 times rated voltage	1.2 times rated voltage / current	1.2 times continuous
Overload Capacity Short Duration	2 times rated voltage, Up to max 5 seconds	- - -	- - -
Power Donsumption	Max 4.5VA	For Voltage : <2VA ; For Current : <2VA	<2VA
Dielectric Test	2 kV AC for 1 minute		
Mounting	Panel mount		
Operating Temperature	0°C to 60°C		
Storage Temperature	-20°C to 60°C		
Relative Humidity (Non - Condensing)	Up to 75%		

AM - I

AM - Direct Type Ammeter

Technical Specification

Accuracy	Class 1.5	
Measured Parameters	AC Current	
Measuring Voltage Range	0 to 5A (CT Secondary)	10A to 100A
Overload Capacity Continuously	1.2 times rated Current	
Overload Capacity Short Duration	10 times of rated current upto max 5 sec	
Power Consumption	Max 0.8VA	
Frequency	50 - 60Hz	
Dielectric Test	2 kV AC for 1 minute	
Mounting	Panel mount	
Operating Temperature	0°C to 60°C	
Storage Temperature	-20°C to 60°C	
Relative Humidity (Non - Condensing)	Up to 75%	

Dimension (All are in mm)

Ammeter, Voltmeter, Frequency & Power factor meter

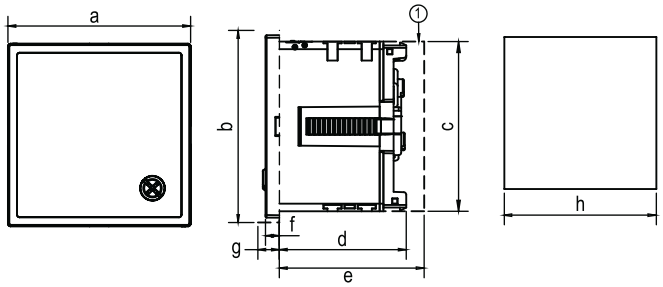

Product	72x72	96x96
Dimensions (in mm)		
a	72	96
b	74.50	98.50
c	67	90.50
d	50	50

Product	72x72	96x96
Dimensions (in mm)		
e	60	60
f	5.50	5.50
g	8	8
h	68	92

Optional parts : 1 - Back cover ; 2 - IP65 : Cover for all type of AM series

Nomenclature

Analog Voltmeters

AM - V - 2 - N

- (Input voltage) N : 300V ; L : 500V
- (Size) 2 : 72 x 72mm , 3 : 96 x 96mm
- (Series) Voltmeter
- (Category) Analog meter

Analog Frequency Meters

AM - Hz - 3 - A - B

- (Frequency range) A : 45 - 65Hz
- (Voltage range) B : 220V, 440V
- (Size) 2 : 72 x 72mm , 3 : 96 x 96mm
- (Series) Freqency
- (Category) Analog meter

Analog Power Factor Meters

AM - PF - 3 - 3PIE - 0.5CAP-1-0.5IND - X - 5A

- Operating current
- Operating voltage : 415, 440V
- Measuring range
- Three phase single element
- (Size) 2 : 72 x 72mm , 3 : 96 x 96mm
- (Series) Power factor
- (Category) Analog meter

Analog Ammeters

AM - I - 2 - 5A - 6S - WD

- Without dial plate
- 6 times suppress
- Secondary current
- (Size) 2 : 72 x 72mm , 3 : 96 x 96mm
- (Series) Ammeter
- (Category) Analog meter

Analog Ammeters (Scales)

SCL - AM - I - 2 - X / 5A - 6S

- 6 times suppress
- Secondary current
- Primary current(15A to 4000A)
- (Size) 2 : 72 x 72mm , 3 : 96 x 96mm
- (Series) Ammeter
- (Category) Analog meter
- Scale plate

Analog Direct Type Ammeters

AM - I - D - 2 - X

- Display scale X : 10A to 100A
- (Size) 2 : 72 x 72mm , 3 : 96 x 96mm
- Direct type
- (Series) Ammeter
- (Category) Analog meter

Ranges for Scale X :
15, 20, 25, 30, 40, 50, 60, 70, 75, 80, 100, 125, 150, 160, 175, 200, 250, 300, 400, 500, 600, 750, 800,1000, 1200, 1250, 1500, 1600, 2000, 2500, 3000, 3200, 4000

Ranges for Direct Type Ammeter X :
10, 15, 20, 25, 30, 40, 50, 60, 70, 75, 80, 100

CURRENT TRANSFORMER

selec®

- Applicable Standard : IEC 61869-2
- Accuracy : Class 0.5 to 5
- Wire sealable terminal cover
- Available range 30A to 6000A

Square (SPCT)

- Available Range : 30A - 4000A
- Accuracy : Class 0.5 to 5

Ring Type (RCT)

- Range : 30A - 600A
- Selable Terminal / Wire Type Output
- Accuracy : Class 1 / 5

Split Core (SCCT)

- Available Range : 100A - 6000A
- Accuracy : Class 0.5 to 3

Tape Wound (TWCT)

- Available Range : 30A - 1600A
- Terminal Output
- Accuracy : Class 0.5 to 5

www.selec.com

Terminologies:

Rated primary current : Value of the primary current on which the performance of the transformer is based.

Rated secondary current : Value of the secondary current on which the performance of the transformer is based.

Rated short-time thermal current : Maximum peak value of the primary current which a transformer will withstand, without being damaged electrically or mechanically by the resulting electromagnetic forces, the secondary winding being short-circuited.

Rated continuous thermal current : Value of the current which can be permitted to flow continuously in the primary winding, the secondary winding being connected to the rated burden, without the temperature rise exceeding the values specified.

Rated primary short-circuit current : R.M.S. value of the A.C. component of a transient primary short-circuit current on which the accuracy performance of a current transformer is based.

While Rated short-time thermal current is related to the thermal limit, Rated primary short-circuit current is related to the accuracy limit. Usually, Rated primary short-circuit current is smaller than Rated short-time thermal current.

Exciting current : R.M.S. value of the current taken by the secondary winding of a current transformer, when a sinusoidal voltage of rated frequency is applied to the secondary terminals, the primary and any other windings being open-circuited.

Instrument security factor (ISF) : The ratio of rated instrument limit primary current to the rated primary current.

The times that the primary current must be higher than the rated value, for the composite error of a measuring current transformer to be equal to or greater than 10%, The secondary burden being equal to the rated burden.

The lower this number is, the more protected the connected instrument are against.

SCCT (Split Core Current Transformer)

Features

- Ranges : 100 to 6000A
- Tamper proof protection cover
- Screw fit for robust fitting
- Mounting type : Busbar
- Accuracy : Class 0.5 to 3

Technical Specification

Standard	IEC-61869-1&2
Rated Primary Rating	100A to 6000A
Rated Secondary Output	5A
Connection	Two secondary terminals on top side with M5 screw
Rated Burden (VA)	1,1.5, 2.5, 3, 5, 7.5, 10, 15
Accuracy	Class 0.5 to 3
System Frequency	50 / 60Hz
System Voltage (Um)	0.72kV
Isolation Test Voltage	3kV AC for 1 min
Thermal Short Circuit Current (Ith)	60xIn
Dynamic Short Circuit Current (Idyn)	2.5xIth
Insulation Class	E (120°C max)
Instrument Security Factor (FS)	2.5, 5, 10
Ambient Temperature	-10°C to +60°C
Humidity	< 95% RH (non condensing)
Mounting Modes	Base mounting / Busbar mounting / Wall mounting

Range Available

SCCT-30/20-100/5A-VA1-CL1-CE

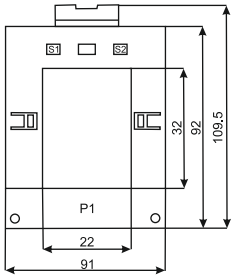

Primary Current	Accuracy		
	0.5	1	3
100	-	1 VA	1.5 VA
150	1 VA	-	1.5 VA
200	1 VA	1.5 VA	2.5 VA
250	1.5 VA	2.5 VA	3.75 VA
300	2.5 VA	3.75 VA	5 VA
400	2.5 VA	5 VA	10 VA

SCCT-120/80-500/5A-VA2.5-CL0.5-CE

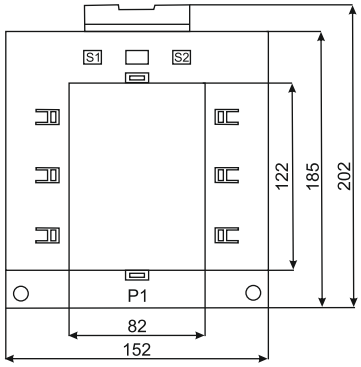

Primary Current	Accuracy		
	0.5	1	3
500	2.5 VA	3.75 VA	15 VA
600	2.5 VA	5 VA	15 VA
750	2.5 VA	2.5 VA	20 VA
800	2.5 VA	7.5 VA	20 VA
1000	5 VA	10 VA	20 VA
1200	7.5 VA	15 VA	30 VA
1250	7.5 VA	15 VA	30 VA
1500	7.5 VA	10 VA	30 VA
1600	10 VA	20 VA	30 VA

Nomenclature

E.g. SCCT-30/20-100/5A-VA1-CL1

SCCT 30/20 100/5A VA 1 CL 1 CE

- CE → Certifiaction
- 1 → (Accuracy Class) 0.5, 1, 3
- VA → (Burden) 1, 1.5, 2.5, 5, 7.5, 10, 15, 20, 30
- 100/5A → (CT Primary) 100, 150, 200, 250, 300, 400, 500, 600, 750, 800, 1000, 1200, 1250, 1500, 1600, 2000, 2500, 3000, 4000, 5000, 6000
- 30/20 → (Size) 30/20 : 30x20mm ; 80/50 : 80x50mm 120/80 : 120x80mm ; 160/80 : 160x80mm
- SCCT → (SCCT) Split Core Current Transformer

SCCT-80/50-250/5A-VA1-CL0.5-CE

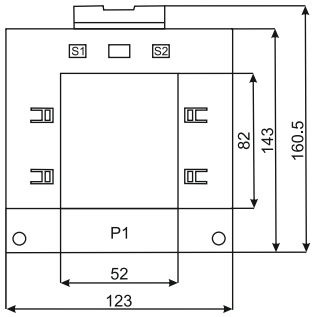

Primary Current	Accuracy		
	0.5	1	3
250	1 VA	2.5 VA	3.75
300	1.5 VA	2.5 VA	5 VA
400	1.5 VA	2.5 VA	10 VA
500	2.5 VA	5 VA	15 VA
600	2.5 VA	5 VA	15 VA
750	2.5 VA	7.5 VA	20 VA
800	2.5 VA	7.5 VA	20 VA
1000	5 VA	5 VA	20 VA

SCCT-160/80-1000/5A-VA10-CL0.5-CE

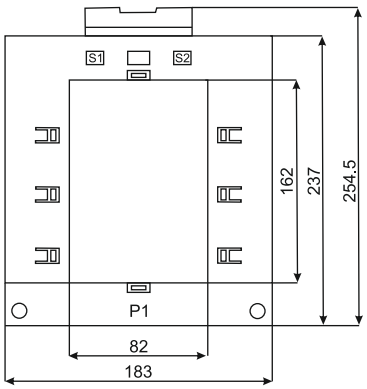

Primary Current	Accuracy		
	0.5	1	3
1000	10 VA	15 VA	20 VA
1200	10 VA	-	-
1250	10 VA	15 VA	20 VA
1500	15 VA	20 VA	30 VA
2000	15 VA	20 VA	30 VA
2500	15 VA	20 VA	30 VA
3000	15 VA	20 VA	30 VA
4000	15 VA	20 VA	30 VA
5000	15 VA	20 VA	30 VA
6000	15 VA	20 VA	30 VA

SPCT (Square Type Current Transformer)

Features

- Compatible with different bus bar sizes
- Range : 30A - 4000A
- Panel mount / Din rail mount (Optional accessory)
- Accuracy : Class 0.5 to 5

Technical Specification

Rated Primary Rating	30A to 4000A
Rated Secondary Output	5A
Connection	Two connection on each side, M4 screws with self lifting clamp strap
Accuracy	Class 0.5 to 5
Thermal Nominal Continuous	120% of In Rated Current (Icth)
Thermal Short Circuit Current (Ith)	Ith = 60 X In for 1 sec
Dynamic Short Circuit Current (Idyn)	2.5xIth
Rated Burden	1VA, 1.25 VA, 3 VA, 5 VA, 7.5VA, 10 VA, 15VA
Instrument Security Factor	FS <5
Max Operating Voltage (Um)	720V maximum
Nominal Rated Frequency AC	50Hz - 60Hz
Isolation Test Voltage	3kV AC 1 min
Insulation Class	E (120°C max)
Ambient Temperature	0°C to +50°C
Storage Temperature	-5°C to +50°C
Humidity	< 95% RH (non condensing)
Mounting Modes	Panel Mount / DIN rail Mount
Case	Unfilled polycarbonate, flame retardant grades classified UL94V-0.

Range Available

SPCT-50/30-60/5A-VA1-CL5-CE

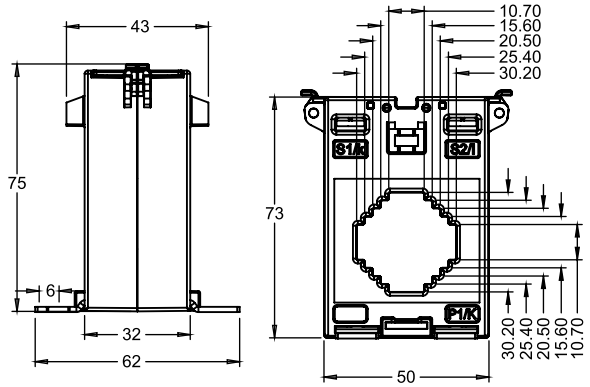

SPCT-50/30-60/5A-VA1-CL5-CE

Primary Current	Accuracy	
	1	5
60	-	1 VA
75	1 VA	-
80	1 VA	-
100	1 VA	-
125	1.25 VA	-
160	1.5 VA	-
200	3 VA	-
250	3 VA	-
400	5 VA	-

SPCT-62/22-30/5A-VA1-CL5-CE

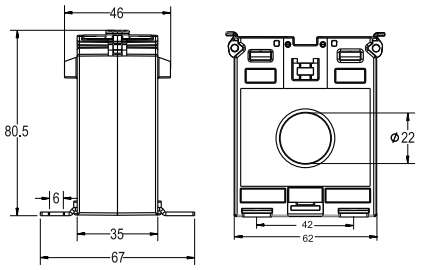

Primary Current	Accuracy
	5
30	1 VA

SPCT-62/40-100/5A-VA1-CL1-CE

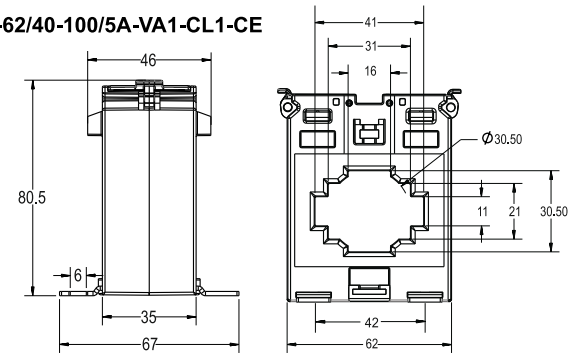

Primary Current	Accuracy	
	0.5	1
100	-	1 VA
100	-	3 VA
125	-	1 VA
150	-	1.5 VA
150	-	3 VA
160	-	1.5 VA
200	2.5 VA	3 VA
250	2.5 VA	3 VA
300	3 VA	-
400	3.75 VA	5 VA

SPCT-100/60-500/5A-VA5-CL1-CE

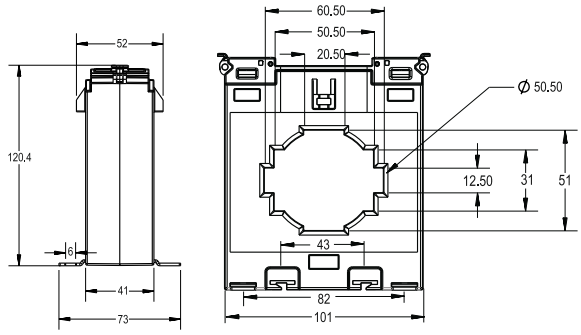

Primary Current	Accuracy	
	0.5	1
500	-	5 VA
600	5VA	7.5 VA
800	10 VA	-
1000	15 VA	-
1200	15 VA	-

SPCT-62/30-50/5A-VA1-CL3-CE

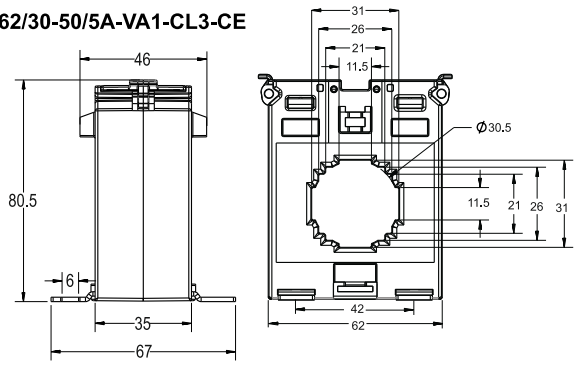

Primary Current	Accuracy		
	1	3	5
30	-	-	1 VA
50	-	1 VA	-
50	-	1.5 VA	-
75	-	1 VA	-
75	-	3 VA	-
100	1 VA	-	-
100	3 VA	-	-

SPCT-140/100-800/5A-VA15-CL0.5-CE

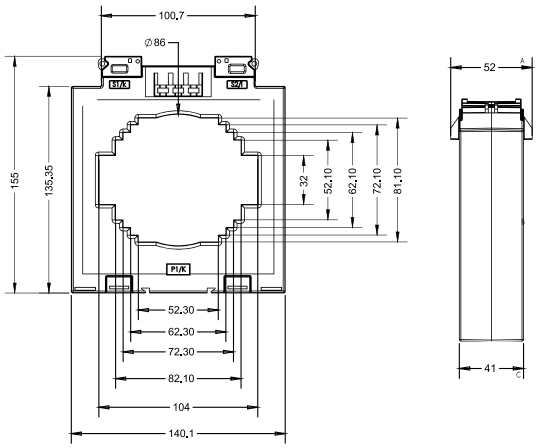

Primary Current	Accuracy	Primary Current	Accuracy
	0.5		0.5
800	15 VA	2000	15 VA
1000	15 VA	2500	15 VA
1200	15 VA	3000	15 VA
1250	15 VA	3500	15 VA
1500	15 VA	4000	15 VA
1600	15 VA		

Nomenclature

E.g. SPCT-50/30-60/5A-VA1-CL5

SPCT 50/30 60/5A VA 1 CL 5 CE

- CE → Certifiaction
- CL 5 → (Accuracy Class) 0.5, 1, 3, 5
- VA 1 → (Burden) 1, 1.25, 1.5, 3, 3.75, 5, 7.5, 10, 15
- 60/5A → (CT Primary) 30, 50, 60, 75, 80, 100, 125, 160, 200, 250, 300, 400, 500, 600, 800, 1000, 1200,1250, 1500, 1600, 2000, 2500, 3000, 4000, 5000, 6000
- 50/30 → (Size) 50/30 : 30x10mm ; 62/22 : DIA 22 ; 62/30 : 30x10mm ; 62/40 : 40x10mm ; 100/60 : 60x12mm ; 140/100 : 100x30mm
- SPCT → (SPCT) Square Type Current Transformer

RCT (Cable Type Current Transformer)

Features

- Available range : 30A - 600A
- Sealable terminal type output
- Accuracy : Class 1 or 5

Technical Specification

Applicable Standard	IEC 61869-1&2
Rated Primary Rating	30A to 600A
Rated Secondary Output	5A
Connection	M4 screws clamp strap assembly
Rated Burden	1.5VA to 5VA
Accuracy	Class 1 / 5
Thermal Nominal Continuous Rated Current (Icth)	120% of In
Thermal Short Circuit Current (Ith)	60 X In for 1 sec
Dynamic Short Circuit Current (Idyn)	2.5xIth
Instrument Security Factor	FS<5
Insulation Class	B
Max Operating Voltage (Um)	720V maximum
Isolation Test Voltage	3kV AC 1 min
Max. lugs Size	8mm
Frequency	50/60Hz
Ambient Temperature	0°C to +50°C
Storage Temperature	-5°C to +50°C
Humidity	< 95% RH (non condensing)
Mounting	Panel Mount
Case	Unfilled polycarbonate, flame retardant grades classified UL 94V-0.

Range Available

RCT-T-D30-30/5A-VA1.5-CL5

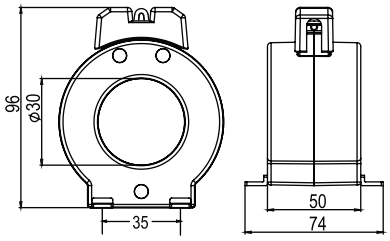

Primary Current	Accuracy	
	1	5
30	-	1.5 VA
50	-	5 VA
75	-	5 VA
100	5 VA	-
150	5 VA	-

RCT-T-D50-200/5A-VA5-CL1

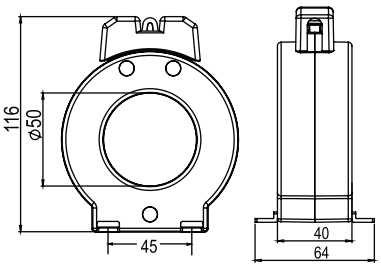

Primary Current	Accuracy	
	1	5
200	5 VA	-
250	5 VA	-
300	5 VA	-
400	5 VA	-
500	5 VA	-
600	5 VA	-

Nomenclature

E.g. RCT-T-D30-30/5A-VA1.5-CL5

RCT-T-D30-30/5 A VA 1.5 CL5

- CL5 → (Accuracy Class) 1, 5
- VA 1.5 → (Burden) 1.5, 5
- 30/5 A → (CT Primary) 30, 50, 75, 100, 150, 200, 250, 300, 400, 500, 600
- D30 → (Size) D30 : DIA 30 , D50 : DIA 50
- T → Terminal Block
- RCT → (RCT) Ring Type Current Transformer

TWCT (Tape Wound Current Transformer)

Features

- Available range : 30A - 1600A
- Rated Burden : 1.5 / 5 / 10VA
- Accuracy : Class 0.5 to 5

Technical Specification

Applicable Standard	IEC 61869-1&2
Rated Primary Rating	30A to 1600A
Rated Secondary Output	5A
Accuracy	Class 0.5 to 5
Thermal Nominal Continuous Rated Current (Icth)	120% of In
Dynamic Short Circuit Current (Idyn)	2.5xIth
Rated Burden	1.5VA, 5VA, 10VA
Thermal Short Circuit Current (Ith)	60 X In for 1 sec
Instrument Security Factor	FS<5
Max Operating Voltage (Um)	720V maximum
Isolation Test Voltage	3kV AC 1 min
Frequency	50/60 Hz
Insulation Class	B (120°C max)
Environmental specifications	
Ambient Temperature	0°C to +50°C
Storage Temperature	-5°C to +50°C
Humidity	< 95% RH (non condensing)
Case	Polycarbonate (PC) , flame retardant grades classified UL94V0

Range Available

TWCT

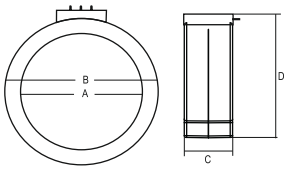

PRODUCT	A	B	C	D
TWCT-T-D35	35	70	45	80
TWCT-T-D55 150 / 5A	55	90	35	100
TWCT-T-D55	55	90	25	100
TWCT-T-D65	65	95	30	105
TWCT-T-D110	110	35	35	145
TWCT-T-D120	120	155	25	165

TWCT-T-D65-500/5A-VA5-CL1

Primary Current	Accuracy
	1
500	5 VA
600	5 VA

TWCT-T-D110-800/5A-VA10-CL0.5

Primary Current	Accuracy
	0.5
800	10 VA
1000	10 VA

TWCT-T-D120-1000/5A-VA10-CL0.5

Primary Current	Accuracy (0.5)
1000	10 VA
1200	10 VA
1600	10 VA

TWCT-T-D35-30/5A-VA1.5-CL5

Primary Current	Accuracy	
	1	5
30	-	1.5 VA
50	-	5 VA
75	-	5 VA
100	5 VA	-
150	5 VA	-

TWCT-T-D55-150/5A-VA5-CL1

Primary Current	Accuracy
	1
150	5 VA
200	5 VA
250	5 VA
300	5 VA
400	5 VA

Nomenclature

E.g. TWCT-T-D35-30/5A-VA1.5-CL5

TWCT-T-D35-30/5 A VA 1.5 CL5

- CL5 → (Accuracy Class) 0.5, 1, 5
- 1.5 → (Burden) 1.5, 5, 10
- 30/5 → (CT Primary) 30, 50, 75, 100, 150, 200, 250, 300, 400, 500, 600, 800, 1000, 1200, 1600
- D35 → (Size) D35 : DIA 35, D55 : DIA 55, D65 : DIA 65, D110 : DIA110, D120 : DIA120
- A → Terminal Block
- TWCT → (RCT) Ring Type Current Transformer

Selec Controls Pvt. Ltd.

EL-27/1, Electronic Zone, TTC Industrial Area, MIDC, Mahape, Navi Mumbai 400710, INDIA.
Tel.: +91-22-4141 8468 / 452. Email: sales@selec.com | www.selec.com