Environmental Specifications

Operating Temperature : 0°C to 55°C
Storage Temperature : -20°C to +70°C

Mechanical Specifications

Terminal Connections

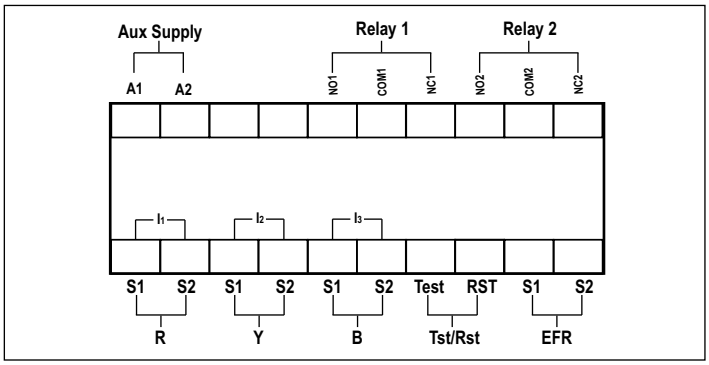

Wiring Diagram

CT Dimensions

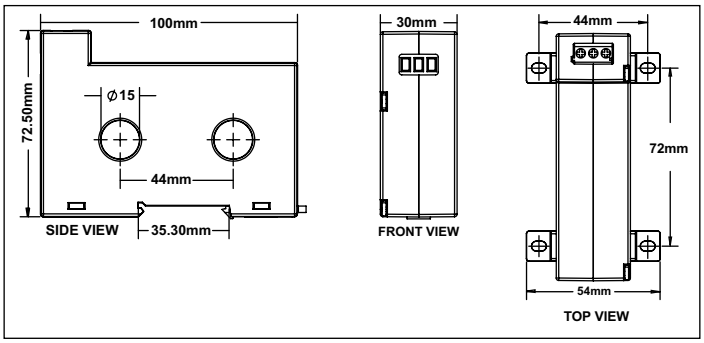

Dimensions

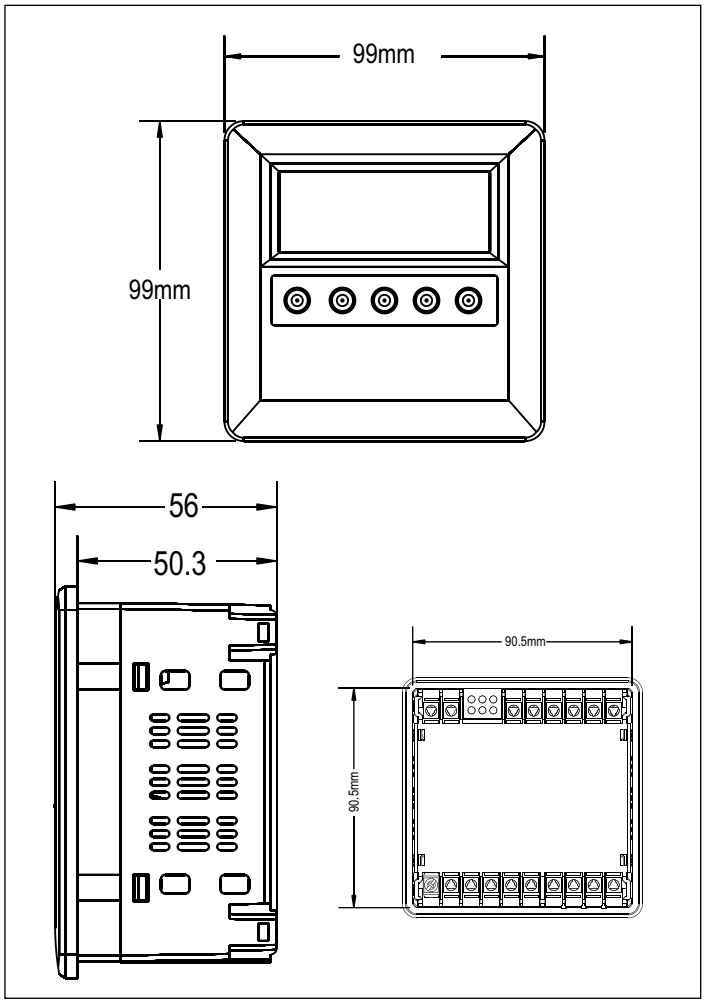

Ordering Information

Product Code	

Accesories

Product Code	

Product Code	