MODBUS REGISTER ADDRESSES LIST

Readable / writable parameters : [Data Structure : Integer] **MODBUS register addresses list continued…**

Address	Hex Address	Parameter		Range	Length (Register)
40037	0x25	Reset Active Power Max DMD	Value : 1	Meaning : Reset Max Active power	1
40038	0x26	Reset Active Power Min DMD	Value : 1	Meaning : Reset Min Active power	1
40039	0x27	Reset Reactive Power Max DMD	Value : 1	Meaning : Reset Max Reactive power	1
40041	0x29	Reset Apparent Power Max DMD	Value : 1	Meaning : Reset Max Apparent Power	1
40042	0x2A	Reset Run Hour	Value : 1	Meaning : Reset Run Hour	1
40043	0x2B	Reset Auxiliary Interrupt	Value : 1	Meaning : Reset Auxiliary Interrupt	1
40044	0x2C	Reset Reactive Power Min DMD	Value : 1	Meaning : Reset Min Reactive power	1
40054	0x36	Page Address Sequence	1-21	1-First Page ; 21-Last Page	1
40055	0x37	Page Address Sequence	1-21	1-First Page ; 21-Last Page	1
40057	0x39	Pulse Duration	Min Value : 0.1(sec)	Max Value : 2.0(sec)	1
40058	0x3A	Pulse Weight	Min Value : 0.01	Max Value : 99.99	1
40059	0x3B	Page Address Sequence	1-21	1-First Page ; 21-Last Page	1
40060	0x3C	Page Address Sequence	1-21	1-First Page ; 21-Last Page	1
40064	0x40	Reset Max Current	Value : 1	Meaning : Reset Max Current	1
40070	0x46	Change Endianness	Value :0 or 1	Meaning : 0: Mid Little Endian (CDAB) 1: Big Endian (ABCD) Default setting :Big Endian	1

3 PHASE 4-WIRE (COMMONLY USED)

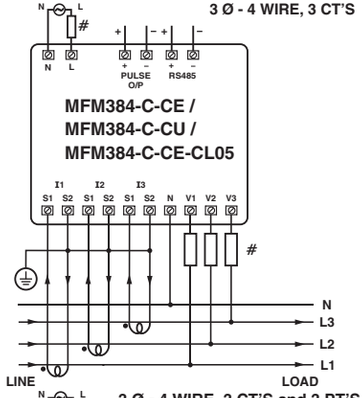

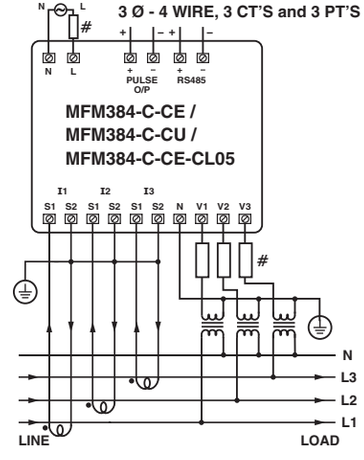

3 PHASE 3-WIRE

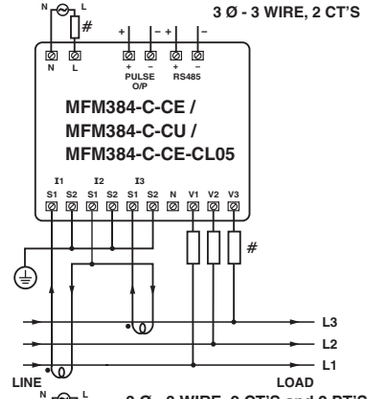

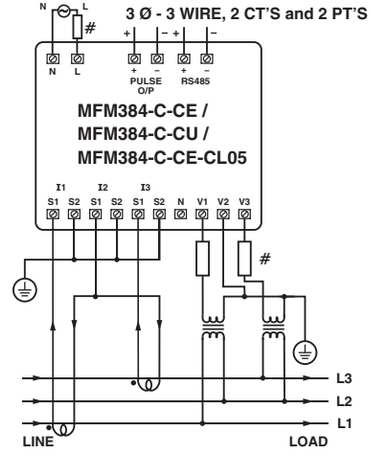

TYPICAL WIRING DIAGRAM

2 PHASE - 3 WIRE

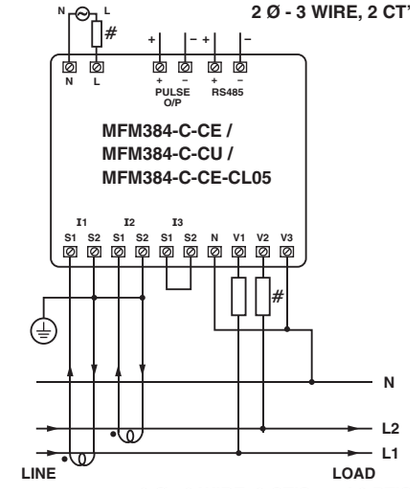

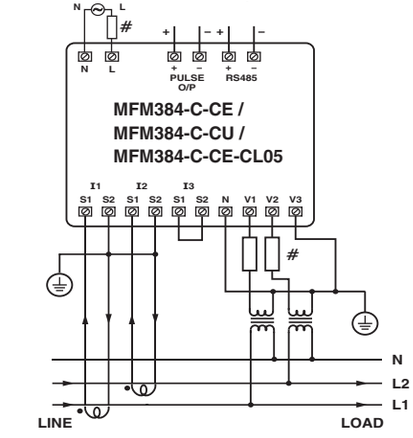

1 PHASE - 2 WIRE

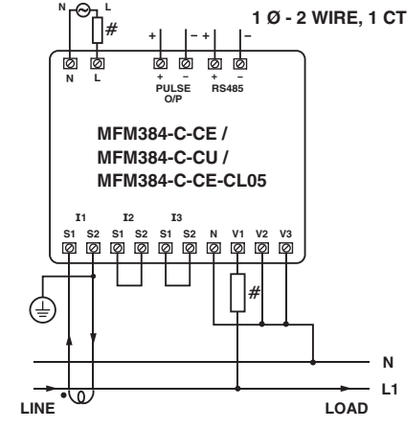

CONNECTION DIAGRAM FOR COMMUNICATION

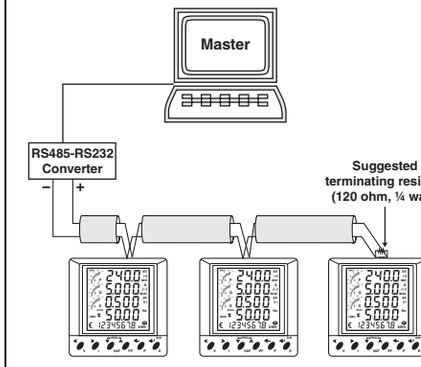

Contact sales for PC based monitoring software to communicate with the meters.

All fuse types : 0.5A class CC UL type
0.5A fast acting 600V

● ENERGY CONTROLLER

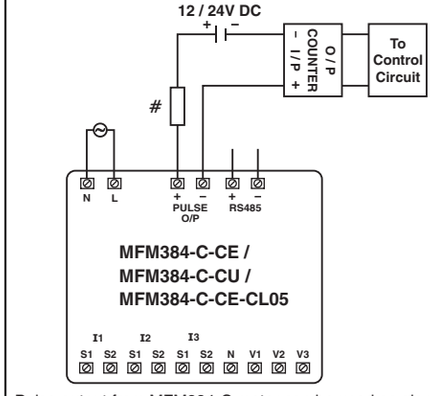

Pulse output from MFM384-C meter can be used as alarm generator or total energy controller by interfacing it with Pre-settable counter and control circuits (Contactors, Relay, Trip Circuit).

The counter is loaded with the maximum energy consumption. When count reaches setpoint it provides output to control circuit to take appropriate action.

All fuse types : 0.5A class CC UL type
0.5A fast acting 600V

(Specifications are subject to change, since development is a continuous process.)

Selec Controls Pvt. Ltd., India

Factory Address :
EL-27/1, Electronic Zone, TTC Industrial Area, MIDC, Mahape, Navi Mumbai - 400 710, INDIA.
Tel. No. : +91-22-41 418 419/430 I Fax No. : +91-22-28471733
Toll free : 1800 227 353 (BSNL/MTNL Subscribers only)
Website : www.selec.com I Email : sales@selec.com