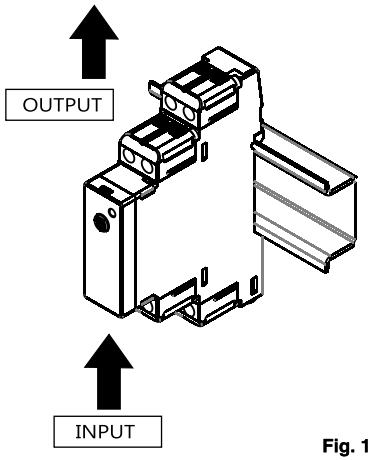

Fig. 1

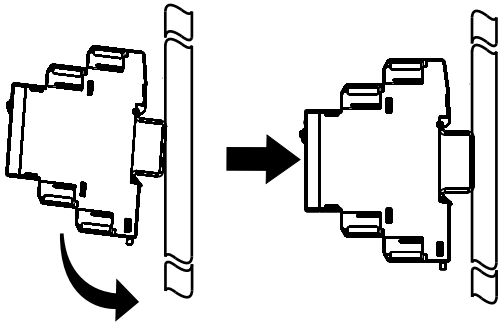

Fig. 2

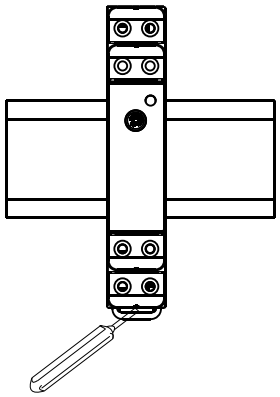

Fig. 3

Attention: (Fig. 1)

1. Do not block the ventilation holes of power supply.
2. Keep at least 20 mm clearance around the switching power supply.
3. The Equipment should not be installed in environmental conditions other than those specified in this manual.

Mounting: (Fig. 2)

1. Slightly tilt the unit to engage on the top side of Din Rail mounting.
2. Press it downward until it gets locked in Din Rail.

Removal: (Fig. 3)

1. Before removing power supply unit from Din Rail ensure that supply has been switched off.
2. Unscrew all the wire connections of power supply unit.
3. Insert a screw driver into the mounting clamp slot & pull it down to remove the power supply from Din Rail.

1. Do not use the power supply without proper grounding (Protective Earth)
2. Do not use in wet locations or in areas where moisture or condensation can be expected.
3. Make sure mains power supply is off before wiring the power supply unit. Make sure of correct wiring. Incorrect wiring may cause electrical shock or damage.
4. Do not touch the power supply during operation or immediately after turning off because some parts get hot or are at high voltage which may cause burns or electrical shock.
5. Do not install the power supply where human body may come into contact while power is supplied to the power supply.
6. Do not repair the power supply at user end. Modification or repairing of the power supply by users may cause electrical shocks, damage & other accidents.
7. If damage or malfunction occurs during operation, immediately turn off mains power.

Minor burns may occasionally occur. Do not touch the product while power is being supplied or immediately after power is turned OFF.	
If the external breaker or fuse is tripped, the equipment may have been seriously damaged. Do not turn ON the input again.	
Minor injury due to electric shock may occasionally occur. Do not touch the terminals while power is being supplied.	
Minor electric shock, fire or product failure may occasionally occur. Do not allow any pieces of metal or conductors or any clippings or cuttings resulting from installation work to enter the product.	

	Indicates the possibility of electrical shock under specific conditions
	Indicates the possibility of injuries by high temperature under specific condition
	Indicates the instructions of unspecified general action.

- This manual is meant for personnel involved in wiring installation operation & routine maintenance of the equipment.
- Disconnect power supply of your system before starting any installation operation or wiring.
- Improper installation operation or wiring may impair safety & failure of the unit or electrical shock or damage.
- Connect the ground completely. A protective earthing terminal stipulated in safety standards is used. Electric shock or malfunction may occur if ground is not connected properly.

This power supply is not field serviceable product. In case of failure or malfunction, send back the power supply to factory.
Please contact service center for repair on the following numbers:

Tel. No. : +91-7498077172;
Email : service@selec.com

NO WARRANTY ON UNIT DAMAGED DUE TO WRONG CONNECTION OF POWER SUPPLY.

(Specifications are subject to change, since development is a continuous process.)

Factory Address :
EL-27/1, Electronic Zone, TTC Industrial Area,
MIDC, Mahape, Navi Mumbai - 400 710, INDIA.
Tel. No. : +91-22-28476443 / 1882
Fax No. : +91-22-28471733 I Toll free : 1800 227 353
Website: www.selec.com I Email: sales@selec.com