MFM384-R-C

Multifunction Meter

DIN 70mm

Features :

- **3Ø True RMS (Voltage, Current)**
- **3Ø Power (Active, Reactive, Apparent)**
- **Import / Export Active, Reactive Energy, Apparent Energy**
- **Programmable CT / PT Primary / Secondary**
- **Modbus RTU Communication (RS485)**
- **Max / Min Demand Power**

Certification : CE

Display Specifications

Display	3 rows, LCD with Backlight
Digits	1 row of 4 digits 2 rows of 7 digits
LED Indications	Integration of Energy (1000 Pulses / kWh)

Input Specifications

Electrical Connection	3Ø - 3 wire, 3Ø - 4 wire, 2Ø - 3 wire, 1Ø - 2 wire
Input Voltage Range	11 to 300V AC (L - N) 19 to 519V AC (L - L)
Input Current Range	Nominal 5A AC (Min - 11mA, Max - 6A)
Frequency	45 to 65Hz
Display Scrolling	Automatic / Manual / Default
Power Consumption	8VA max
Display Reset	Programmable (For energy)
Resolution	For energy : 0.01k, 0.1k,1k, 0.01M, 0.1M, 1M (depending upon CT ratio x PT ratio) For Power, Voltage, Current : Auto Resolution For Power Factor : 0.01
Accuracy	Voltage (L - N / L - L) : ±0.5% of F.S. Current : ±0.5% of F.S. Power Factor : ±0.01 Frequency : ±0.1% For L - N Voltage >20V For L - L Voltage >35V Power (Active, Reactive, Apparent) : 1% Energy (Active, Reactive, Apparent) : Class 1
Memory Retention	10 years (For energy)
Measuring Parameters	Voltage (L - L / L - N) (Individual / Average), Current (Individual / Average), Frequency, Power Factor (Individual / Total) Active, Reactive & Apparent power (Individual / Total), Active, Reactive, Apparent Energy (Import / Export), Demand (Min / Max Active Power, Min / Max Reactive Power, Max Apparent Power)

Output Specifications

Communication Interface and Protocol	RS485 and MODBUS RTU
Communication Address	1 to 255
Transmission Mode	Half duplex
Transmission Distance	500 meter maximum
Transmission Speed	300, 600, 1200, 2400, 4800, 9600, 19200 (in bps)
Parity	None, Odd, Even
Stop Bits	1 or 2
Response Time	100ms (max and independent of baud rate)

Auxiliary Supply Specifications

Supply Voltage	85 to 270V AC, (50 / 60Hz)

Settable Parameters

CT Primary	1 / 5A to 10kA (Programmable for any value)
CT Secondary	1 / 5A (Programmable)
PT Primary	100V to 500kV (Programmable for any value)
PT Secondary	100V to 500V (Programmable for any value)

Environmental Specifications

Temperature	Operating Temperature : -5^0 to 60^0C Storage Temperature : -20^0 to 75^0C
Humidity (non - condensing)	Upto 85% RH

Mechanical Specifications

Mounting	Din Rail
Weight	208gms

Dimensions (All dimensions are in mm)

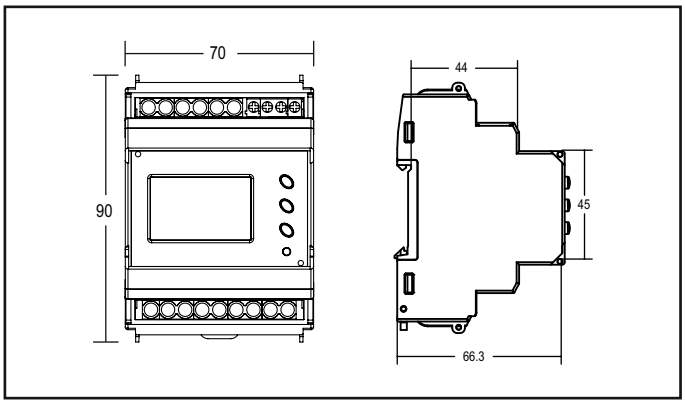

Terminal Connection

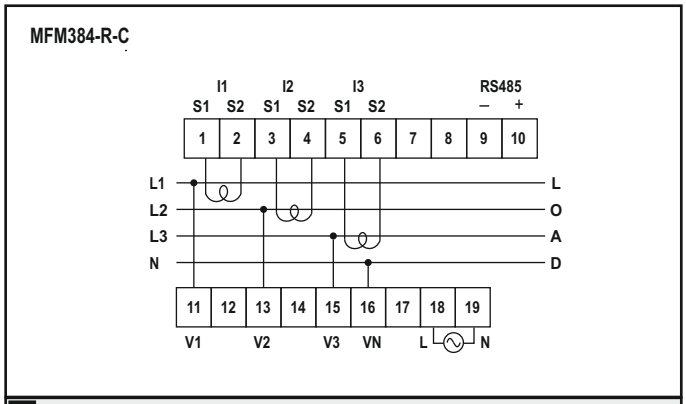

Cable Size (mm²) : 0.5 to 2.5; Tightening Torque (N - m) : 0.68 to 0.79

Compliance

Applicable EMI / EMC Standards		
Product Standard : IEC 61326 - 1		
Category		**Standards Compliance**
ESD Immunity	IEC 61000 - 4 - 2	Level IV (Air Discharge : 15kV), (Contact Discharge : -8kV)
Surge Immunity	IEC 61000 - 4 - 5	+ / - 2kV Common Mode, (Line to Ground) + / - 1kV Differential Mode, (Line to Line)
Radiated Susceptibility	IEC 61000 - 4 - 3	Level III, 80 to 1000MHz (10V / m) Level II, 1.4GHz to 2GHz (3V / m) Level I, 2GHz to 2.7GHz (1V / m)
Conducted Susceptibility	IEC 61000 - 4 - 6	Level II (3V / m)
Voltage Dips and Interruptions	IEC 61000 - 4 - 11	**Dips** : 0% residual voltage / 1 cycle (Criteria B), 40% residual voltage / 10 cycles 50Hz / 12 cycles 60Hz (Criteria C) 70% residual voltage / 25 cycles 50Hz / 30 cycles 60Hz (Criteria C) **Interruptions** : 0% residual voltage / 250 cycles 50Hz / 300 cycles 60Hz (Criteria C)
Conducted Emission	CISPR - 11	
Radiated Emission	CISPR - 11	
Electrical Fast Transient	IEC 61000 - 4 - 4	Level III (2kV)

Ordering Information

Product Code	Supply Voltage	Output	Certification
	85 to 270V AC	Comm. (RS485)	
MFM384-R-C	Yes	Yes	---
MFM384-R-C-CE	Yes	Yes	CE