Solid State Relay

Panel Mount - AC Input & AC Output Single Phase

selec®
Creating Best Value

RSS SERIES

- Output current of 25 and 40 Amps
- Output voltage of 24-330V and 48-480VAC
- Control voltage of 90-280VAC
- Integrated IP20 touch safe removable cover
- Input status indicator - LED
- Cost-effective solution

Product selection-Zero crossing

Product name	RSS-TA1A125ZP	RSS-TA1A140ZP	RSS-TA1A225ZP	RSS-TA1A240ZP	RSS-TA1A225ZPL	RSS-TA1A240ZPL
Rated load current	25A	40A	25A	40A	25A	40A
Output voltage	24-330VAC	24-330VAC	48-480VAC	48-480VAC	48-480VAC	48-480VAC
Control voltage	90-280VAC	90-280VAC	90-280VAC	90-280VAC	90-280VAC	90-280VAC
Transient voltage	800	800	800	800	1200	1200

NOMENCLATURE

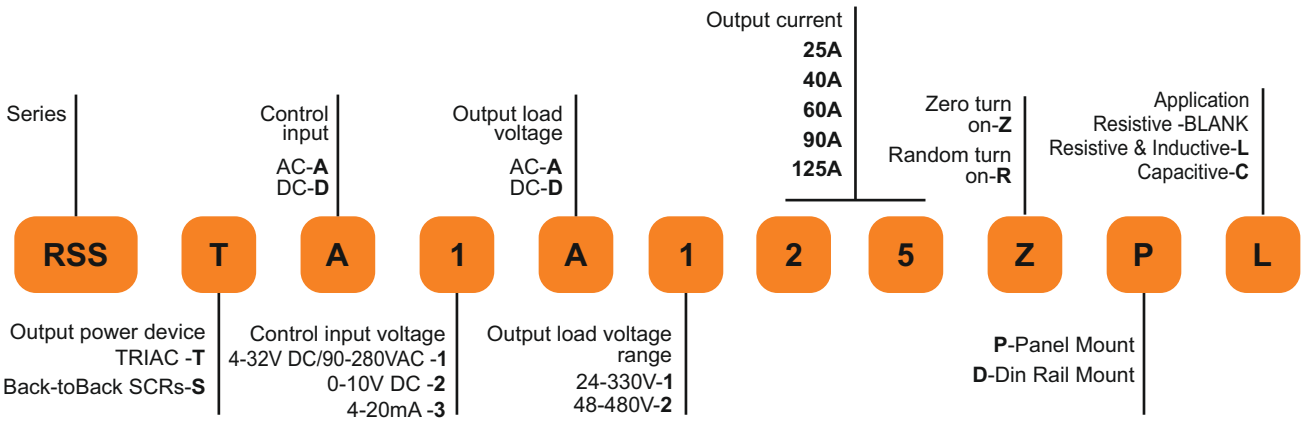

1 : Input Specification

Description	
Control voltage range	90-280V AC
Control current range	7-20mA
Nominal input impedance	2k ohm
Pick up voltage	90V AC
Drop out voltage	45V AC
Maximum response time pick up	½ cycle+1 sec
Maximum response time drop up	½ cycle+1 sec
Max reverse voltage	40VDC
Zero crossing turn on	Available
Reverse voltage Protection	Available
LED indicator showing relay ON state	Available

2 : Output Specification

Description	RSS-TA1A125ZP	RSS-TA1A140ZP	RSS-TA1A225ZP	RSS-TA1A240ZP	RSS-TA1A225ZPL	RSS-TA1A240ZPL
Maximum Load current (Arms)	25	40	25	40	25	40
Minimum Load Current [mArms]	50	50	50	50	50	50
Min/Max Operating Voltage (Vrms)	24-330	24-330	48-480	48-480	48-480	48-480
Transient voltage (Vpk)	800	800	800	800	1200	1200
Maximum off state leakage current @ Rated voltage (mArms)	10	10	10	10	10	10
On state voltage drop @ Rated current (Vrms)	1.5	1.5	1.5	1.5	1.5	1.5
Minimum off state dv/dt @ maximum rated voltage (V/usec)	1000	1000	1000	1000	1000	1000
1 Second surge current (Apk. Ta=25 °C) 50Hz	100	150	100	150	100	150
Maximum 1 cycle surge current Typ @ 50Hz (Arms)	250	400	250	400	250	400
Thermal Resistance Junction to Case (Rjc) [°C/W]	0.8	0.9	0.8	0.9	0.8	0.9
Maximum 1/2 Cycle $I^2 t$ for Fusing @ 50 Hz (min. / typical) [A^2sec]	340	800	340	800	340	800
Minimum Heat Sink for Rated Current @ 40°C [°C/W]	1	1	1	1	1	1

3 : General Specification

Description	RSS-TA1A125ZP	RSS-TA1A140ZP	RSS-TA1A225ZP	RSS-TA1A240ZP	RSS-TA1A225ZPL	RSS-TA1A240ZPL
Dielectric Strength, Input/Output to Ground	2500 Vrms	4000 Vrms	2500 Vrms	4000 Vrms	2500 Vrms	4000 Vrms
Dielectric Strength, Input to Output	4000 Vrms					
Minimum Insulation Resistance	100 MΩ (at 500 VDC)					
Maximum Capacitance, Input/Output	0.8pF					
Ambient Temperature	Operating: -30°C to 80°C Storage: -30°C to 100°C					
Ambient Humidity	93% non-condensing					
Heat sink Thermal Resistance:	1°C/W					

4 : Housing Specification

Dimensions (Lx Wx H) (mm)	44.5x 57.5x 27.3
Weight	87.2 g approx
Baseplate	Aluminum
Material	Glass filled polyester
Mounting Type	Panel mount
LED input Status Indicator	Red

5 : Circuit Block Diagram

RSS Series

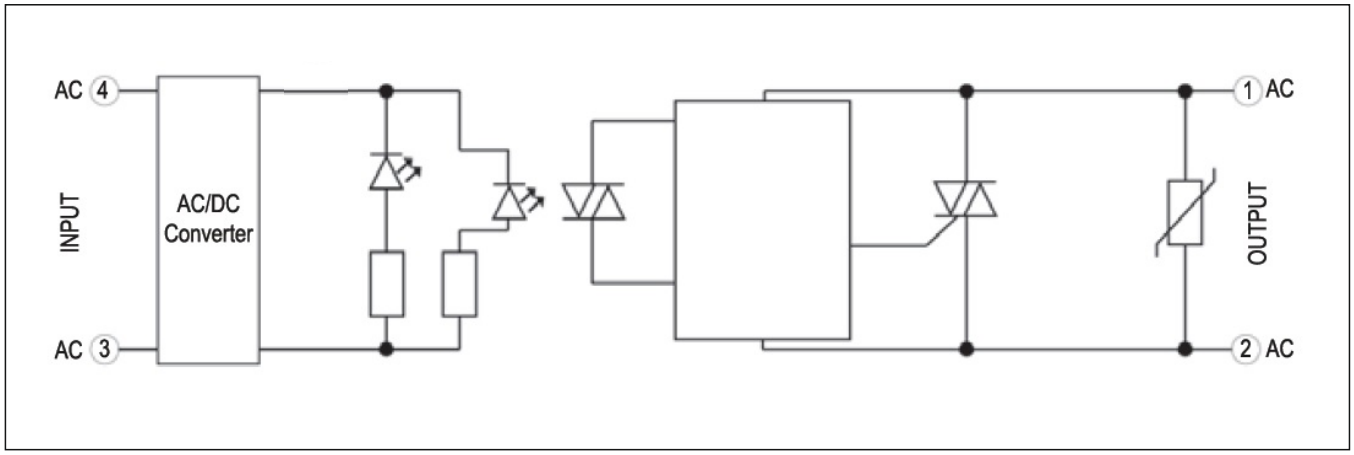

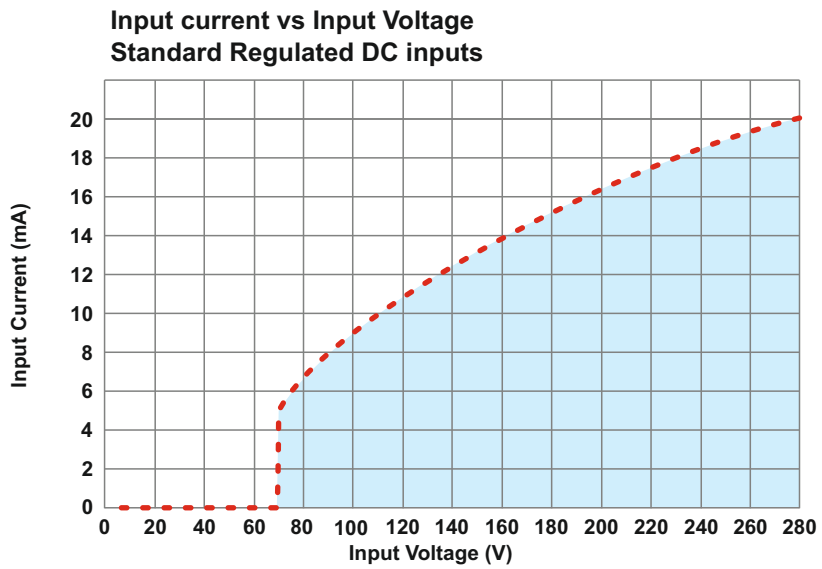

6 : Surge Current Information

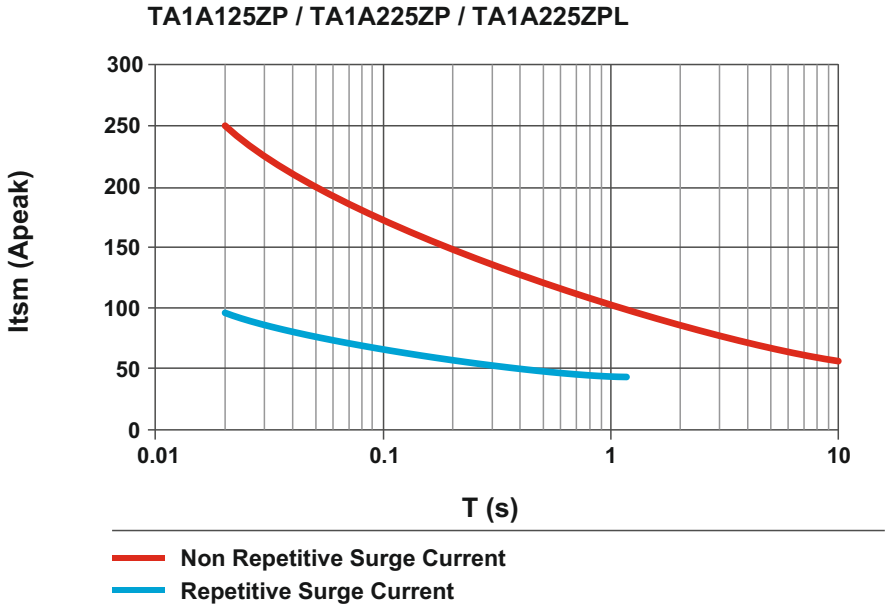

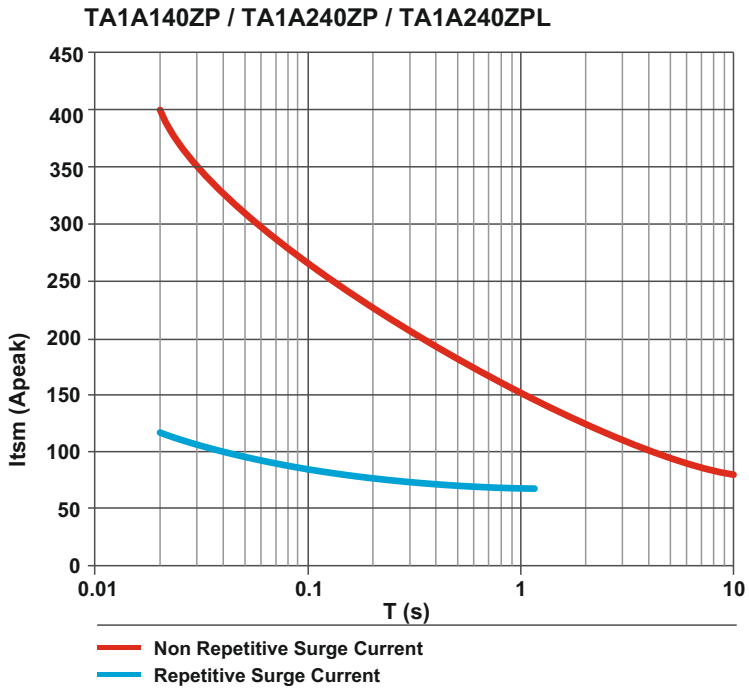

7 : Thermal Derating Curves

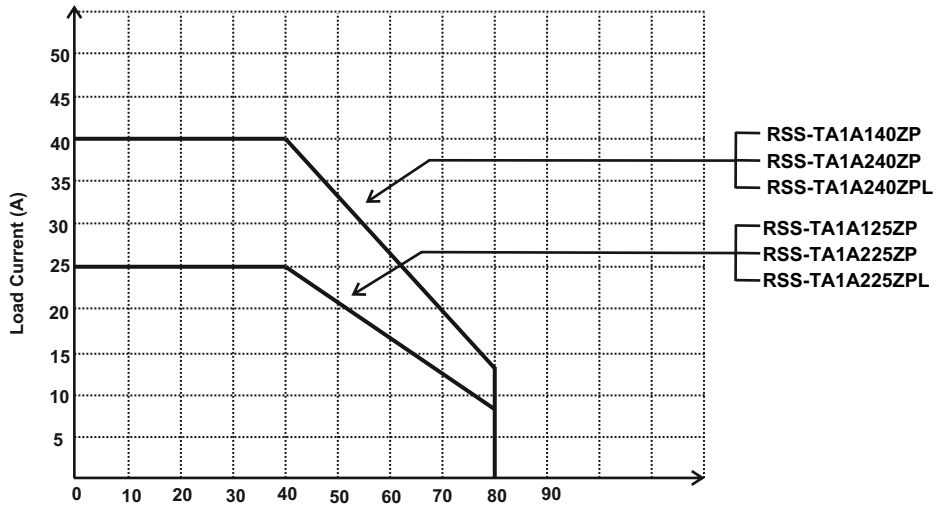

Ambient temperature [°C]
Note.: Heat sink used with a radiation efficiency of 1°C/W

8 : Wiring

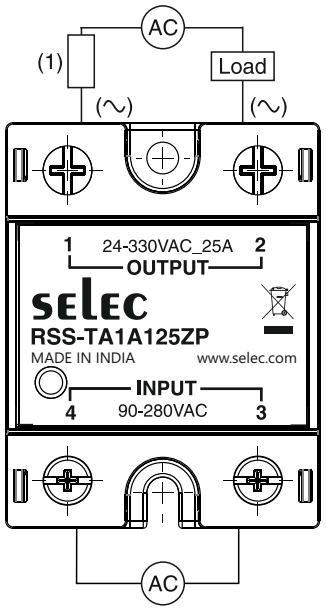

9 : Dimension (mm)

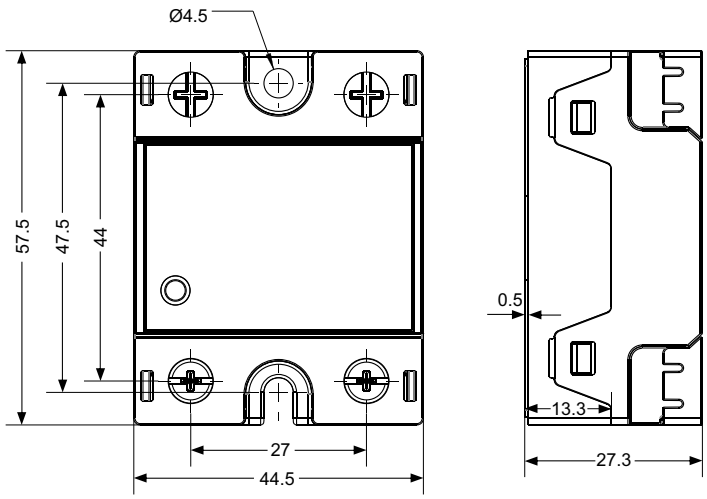

10 : Tightening Torque

Screw Size	Wire Size (Solid)	Tightening Torque
M4 Screws (control input)	18..14 AWG (0.75..2.5 mm²) 2 x 18..14 AWG (0.75..2.5 mm²)	1.2 N-m
M5 Screws (load output)	16..8 AWG (1.5..10 mm²) 2 x 16..8 AWG (1.5..10 mm²)	2.0 N-m