selec APFC346
Operating Instructions

PRODUCT PROFILE

96 x 96mm

SPECIFICATIONS

Display	: Liquid crystal display with backlight 4 digits to show electrical parameters.
Wiring input	: 2ø-2 wire (L2-L3)
Auxiliary Supply	: 90 to 550 V AC
Rated input voltage	: 50 to 520 V AC (L2-L3)
Rated input current	: Nominal 5A AC (min 50mA, max 6A)
Burden	: 20 m ohms
Frequency Range	: 45-65Hz
Power Consumption	: 7VA Max
Controlling Range	: Target PF: 0.800(Ind) to -0.800(Cap) Switching Program : Automatic
Trip Indication	: CURR : No Current : : No Voltage
Environmental Conditions	: Outdoor use Temperature : Operating : 0°C to 60°C Storage : -20°C to 60°C Humidity : 0% to 95% without moisture consideration
Mounting	: Panel Mounting
Weight	: 263 gms.

ORDER CODE INFORMATION

PRODUCT	SUPPLY	CE	NO. OF STAGES
APFC346-108-230V-CE	85-270V AC, 50/60Hz	■	08

ACCURACY

Measurement	Accuracy
Power Factor	±0.01

EMC GUIDELINES

1. Use proper input power cables with shortest connections and twisted type.
2. Layout of connecting cables shall be away from any internal EMI source.

SAFETY PRECAUTIONS

All safety related codification, symbols and instructions that appear in this operating manual or on the equipment must be strictly followed to ensure the safety of the operating personnel as well as the instrument.

If the equipment is not handled in a manner specified by the manufacturer, it might impair the protection provided by the equipment.

⚠ **CAUTION** : Read Complete instruction prior to installation and operation of the unit.

⚠ **WARNING** : Risk of electric shock.

⚠ WIRING GUIDELINES

1. To prevent the risk of electric shock, power supply to the equipment must be kept OFF while doing the wiring arrangement. Do not touch the terminals while power is being supplied.
2. Wiring shall be done strictly according to the terminal layout. Confirm that all connections are correct.
3. Use pin type lugged terminals.
4. To eliminate electromagnetic interference, use wires with adequate ratings and twists of the same in equal size shall be made.
5. Cables used for connection to power source, must have a cross section of 1.5mm^2. These wires shall have current carrying capacity of 5A.

■ MAINTENANCE

1. The equipment should be cleaned regularly to avoid blockage of ventilating Parts.
2. Clean the equipment with a clean soft cloth. Do not use Isopropyl alcohol or any other cleaning agent.

INSTALLATION GUIDELINES

⚠ **CAUTION**

1. This equipment, being built-in type, normally becomes a part of main control panel and in such case the terminals do not remain accessible to the user end after installation and internal wiring.
2. Conductors must not come in contact with the internal circuitry of the equipment or else it may lead to a safety hazard that may in turn endanger life or cause electrical shock to the operator.
3. Before disconnecting the secondary winding of the external current transformer from the equipment, make sure that the current transformer is short circuited to avoid risk of electrical shock and injury.
4. The equipment shall not be installed in environmental condition other than those mentioned in this manual.
5. Thermal dissipation of equipment is met through ventilation holes provided on chassis of equipment. Such ventilation holes shall not be obstructed else it can lead to a safety hazard.
6. Connector screw must be tightened after installation.

MECHANICAL INSTALLATION / DIMENSIONS

1. Prepare panel cut out with proper dimensions as shown in the figure.
2. Push the meter into the panel cutout. Secure the meter in its place by pushing the clamp on the rear side. The screw of the panel clamp must be in the farthest forward slot.
3. For proper sealing tighten the screw evenly with required torque.

⚠ **CAUTION**

The equipment in its installed state must not come in close proximity to any heating sources, caustic vapors, oils, steam or other unwanted process by product.

OUTLINE DIMENSIONS (in mm)

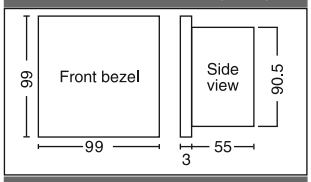

PANEL CUTOUT (in mm)

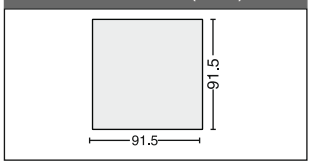

FRONT PANEL DESCRIPTION

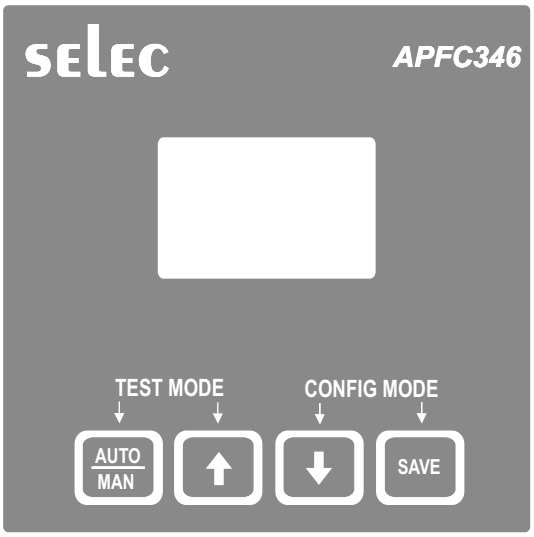

KEY DESCRIPTION	
Press ↓ + SAVE	For 5 sec. to enter or exit from the configuration menu.
Press ↑	For increment configuration parameter & their value.
Press ↓	For decrement configuration parameter & their value.
Press SAVE	To save the setting and go to next page.
Press AUTO MAN	To go previous page in configuration menu. For 3 sec. to toggle Control mode(AUTO/MAN).
Press AUTO MAN + ↑	For 5 sec to enter in Test Mode.Test mode checks all the relays present in product sequentially.
Press ↑ + ↓	For 5 sec to start Auto-Initialization(A.INT) and read bank values.

Note: The settings should be done by professional after going through this operating manual.

SERIAL NUMBER DESCRIPTION

Press SAVE Key for 5 sec to display 8 digit serial number

Example : Sr. No. 12345678	
Press SAVE Key for 5 sec	Display 1234 for 1sec.
	After 1 sec displays 5678 for 1 sec.

CT.CR MODE DESCRIPTION

CT.CR (Automatic S1,S2 reversal correction): If CT connection is reversed and COS FI doesn't match with electricity board meter then turn ON CT.CR .

AUTO / MANUAL MODE DESCRIPTION

Press AUTO MAN key for 3 sec to change control mode(Auto/Manual).

Press ↑ key to turn ON relay one by one in manual mode.

Press ↓ key to turn OFF relay one by one in manual mode.

USER GUIDE

a) Manual switching (MAN) : When this switching program is selected, the capacitor steps are controlled manually by the user.
b) Automatic switching (AUTO) : This automatic switching program uses intelligent switching sequence. The step switching sequence is not fixed and the program automatically selects the most appropriate steps to switch in or out in order to achieve shortest reaction time with minimum number of steps.

CONFIGURATION MENU

Press ↓ + SAVE keys for 5 sec. to Enter or Exit from Configuration menu.

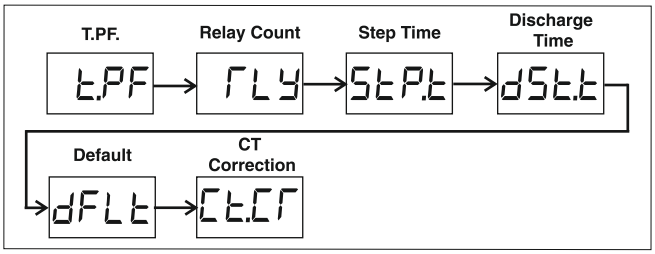

There are 4 dedicated keys AUTO MAN , ↑ , ↓ , SAVE to scroll through configuration menu

CONFIGURATION MENU

Parameter	Display	Range	Default Value
Target PF	T. PF	-0.800 to 0.800	1.000
Relay count	RLY	1 - 8	8
Step time	STP.T	1s-999s	15s
Discharge Time	DIS.T	1s-999s	40s
Default	DFLT	YES/NO	NO
CT Correction	CT.CR	ON/OFF	OFF

NOTE

- For CT Reversal Automatic Correction, Power Factor must be in I or IV quadrant during power ON of controller.
- Auto-Initialization(A.INT) to be done at best, under stable load conditions for proper reading of bank values.
- Auto-Initialization(A.INT) works only with capacitor banks and not with reactors.
- When condition of low current occurs, the display of controller will show 'CURR'.

WIRING DIAGRAM

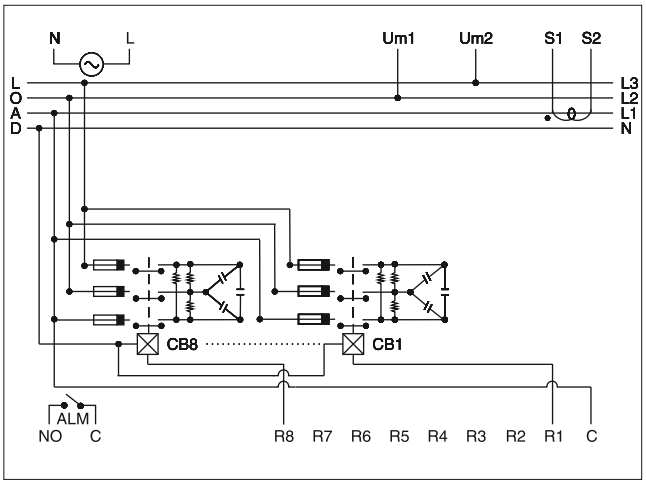

(Specifications are subject to change, since development is a continuous process.)

Selec Controls Pvt. Ltd., India

Factory Address : EL-27/1, Electronic Zone, TTC Industrial Area, MIDC, Mahape, Navi Mumbai - 400 710, India.
Website : www.selec.com
For Sales & Support,
Tel. No. : +91-22-41 418 468/452
Mob. No. : +91-9136977315, **Email :** sales@selec.com
For Service,
Tel. No. : +91-7498077172 / +91-7400069545
Email : service@selec.com