Terminal Connections

DIGIX-1-1-1-230V

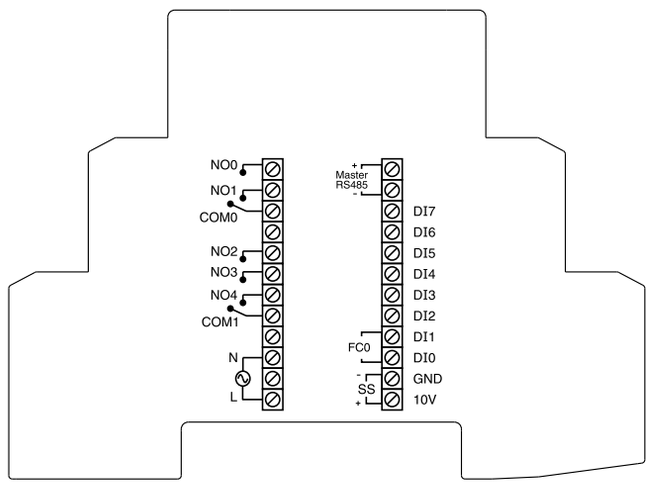

Digix-1-230V

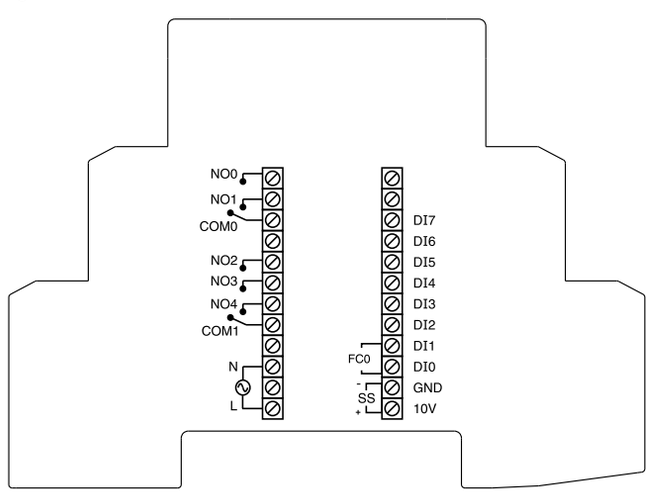

Digix-1-0-0-24VDC

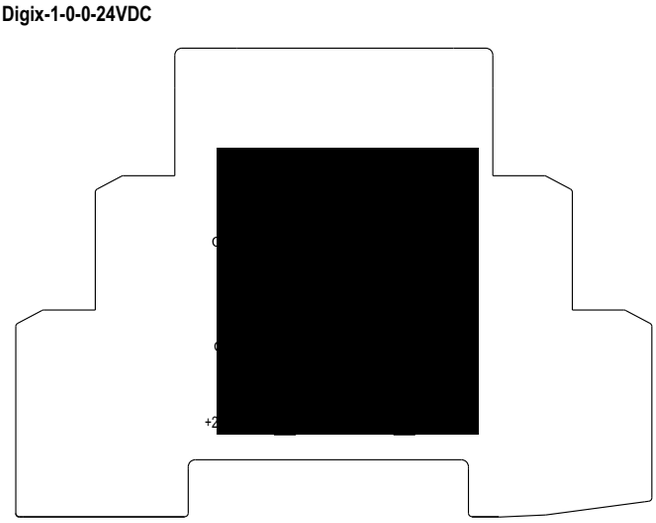

Ordering Information

	Description
DIGIX-1-1-1-230V	8 Inputs, 8 Outputs, RS485 Master, RTC, 230V AC Supply
DIGIX-1-230V	8 Inputs, 8 Outputs, 230V AC Supply
DIGIX-1-0-0-24VDC	8 Inputs, 8 Outputs, 24V DC Supply

Accessories (to be ordered separately)

Downloading Cable	AC-USB-RS485-03
Networking	ACH-004 (RJ25 Cable) AC-IOEXP-03 (Expansion Adaptor) AC-USB-RS485-02 (USB to RS485 Cable)