Features :

- Built In RJ45 cable
- Single phase & 3 Phase CTs
- Converter for current measurement Up to 800A

Certification : CE

CT 3PH-D13mm-80A-G

Specification

Rated input current	Nominal 80A AC (Min 4A - Max 96A)
No. of phases	3
Inner dia	13mm
Mounting	Din rail & Wall mount

Dimension (All are in mm)

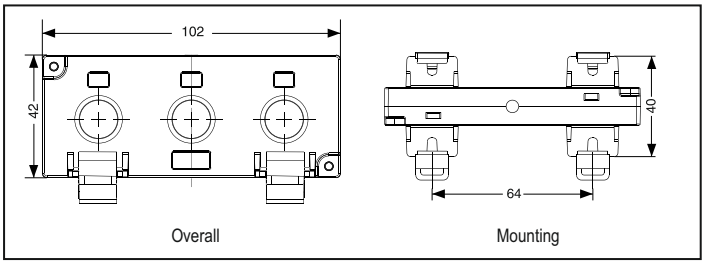

CT 1PH-D13mm-80A-G

Specification

Rated input current	Nominal 80A AC (Min 4A - Max 96A)
No. of phases	1
Inner dia	12mm
Mounting	Din rail & Wall mount

Dimension (All are in mm)

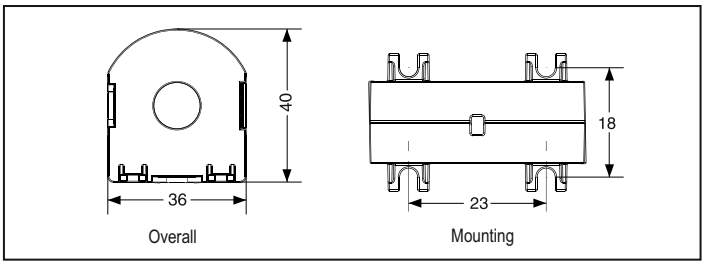

CT 3PH-21x25mm-250A-G

Specification

Rated input current	Nominal 250A AC (Min 10A - Max 300A)
No. of phases	3
Inner dia	21x 25mm
Mounting	Din rail & Wall mount

Dimension (All are in mm)

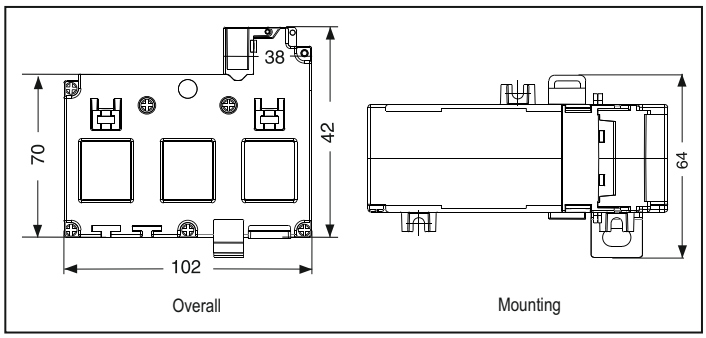

CT 1PH-30x10mm-250A-G

Specification

Rated input current	Nominal 250A AC (Min 10A - Max 300A)
No. of phases	1
Inner dia	30x10mm
Mounting	Din rail & Wall mount

Dimension (All are in mm)

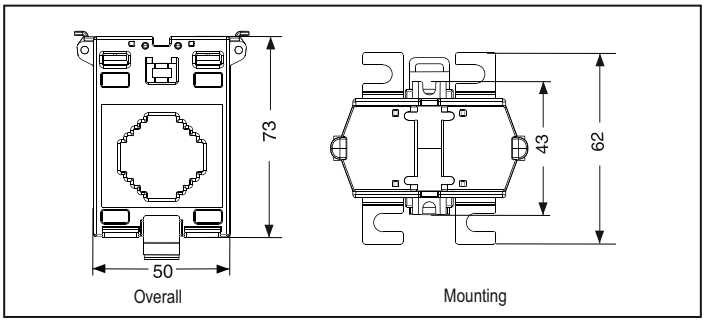

3PH 5A CONVERTER-G

Specification

Rated input current	Nominal 5A AC (Min 50mA - Max 6A)
No. of phases	3
Inner dia	4.85mm
Mounting	Din rail & Wall mount

Dimension (All are in mm)

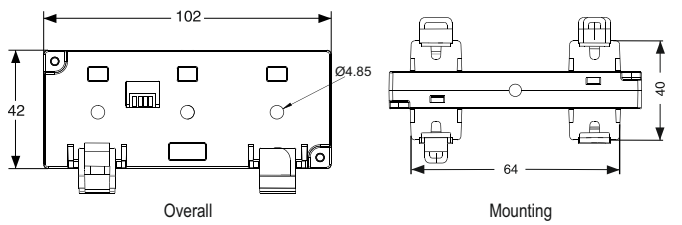

DIP switch selection for converter

DIP Configuration	CT
	5A
	400A
	500A
	630A
	800A

Switch Setting Example - ON 4 3 2 1

Conventional CTs to be used along with converter

Wiring diagram

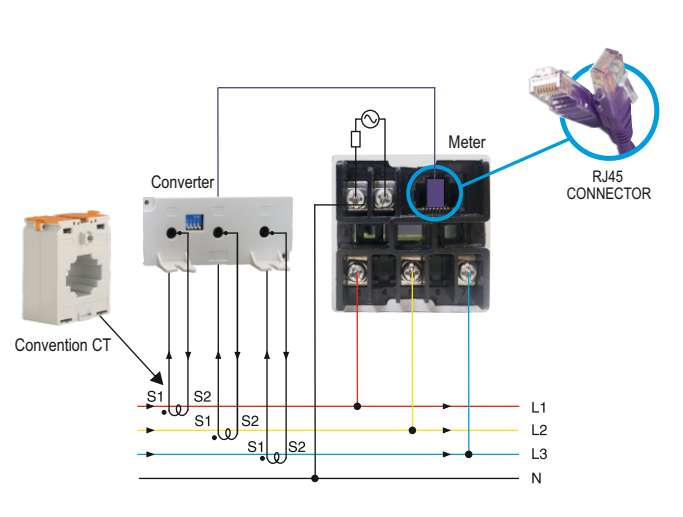

Compliance

Applicable EMI / EMC Standards		
Product Standard : IEC 61326-1		
Category		**Standards Compliance**
ESD Immunity	IEC 61000-4-2	Level II (Air discharge : 8kV), (Contact Discharge : 4kV)
Surge Immunity	IEC 61000-4-5	+/- 2kV common mode, (Line to ground)
Radiated Susceptibility	IEC 61000-4-3	Level III, 80 to 1000MHz (10V/m) Level II, 1.4GHz to 2GHz (3V/m) Level I, 2GHz to 2.7GHz (1V/m)
Conducted Susceptibility	IEC 61000-4-6	Level II (3Vrms)
Voltage Dips and Interruptions	IEC 61000-4-11	**Dips** : 0% residual voltage / 1 cycle (Criteria B), 40% residual voltage / 10 cycles 50Hz / 12 cycles 60Hz (Criteria C) 70% residual voltage / 25 cycles 50Hz / 30 cycles 60Hz (Criteria C) **Interruptions** : 0% residual voltage / 250 cycles 50Hz / 300 cycles 60Hz (Criteria C)
Conducted Emission	CISPR-11	
Radiated Emission	CISPR-11	
Electrical Fast Transient	IEC 61000-4-4	Level II (2kV)

Ordering information

Product code	Supply voltage / Current range	Certification
CT 1PH-D13mm-80A-G	80A	CE
CT 1PH-30x10mm-250A-G	250A	CE
CT 3PH-D13mm-80A-G	80A	CE
CT 3PH-21x25mm-250A-G	250A	CE
3PH 5A CONVERTER-G	---	CE