OP1009-V01

selec

AC-S2E-02-CE-
Operating Instr

1. PRODUCT PROFILE

LED Indication & RESET Key:

Indicator	Function	Description
Power	Power is ON	Converter has power
Link	Network link	IP Status LED
TX	Rs485 Transmit data	Flashing when sending data
RX	Rs485 Receive data	Flashing when receiving data
Reset	Factory Reset	Reset switch for Factory reset

DEVICE DEFAULT SETTINGS:
Network Setting : DCP, Mode, IP
Serial Setting : 9600,8,N,1
Mode Setting ransparent Mode, TCP Server, MODBUS TCP

2. OVERVIEW

Serial to Ethernet (S2E) converter is a communication device that allow you to control serial Data over a TCP Ethernet.

3. SPECIFICATIONS

ITEM	SPECIFICATIONS
Power supply	
Supply Voltage	12 to 30 VDC
Power Consumption	<1W
SERIAL INTERFACE	
Serial Standard	RS485
No. of ports	1
Connector	Green 3 Pin Screwable terminal
Protocol	Modbus TCP
Baudrate	300 bps to 1500 bps
Data bits	7, 8
Stop bits	1, 2
Parity	None, Odd, Even
RS485 Signal	Data+, Data-
RS485 Data Direction Control	Auto
ETHERNET INTERFACE	
Connector	8 pin RJ45
No. of Ports	1
Speed	10/100 Mbps
Transmission Distance	Max upto 100 m
Protocol	TCP(Server, client), Modbus TCP
Standards	IEEE802.3, IEEE802.3u
Magnetic Isolation Protection	1.5kV
IP Configuration	DHCP, Static IP
Signal	Tx+, Tx-, Rx+, Rx-
MECHANICAL SPECIFICATIONS	
Dimension (W x H x D)	35 mm x 90 mm x 88 mm
Weight (g)	87.1
Mounting	Din Rail Mounting
ENVIRNMENT CONDITION	
Operating Temperature	0°C to 65°C
Storage Temperature	-20°C to 70°C
Humidity (non- condensing)	10% to 95% RH

4. DIN RAIL MOUNTING / DIMENSION

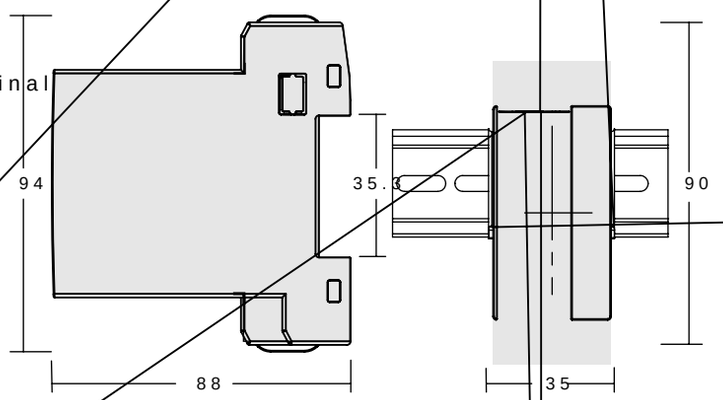

Dimensions in mm

- Install the device in an enclosure with sufficient space around it to allow heat dissipation,
- Be sure to use DIN rail clamp to stop movement of the device
- The clamp is at the bottom of the device. Tie to DIN rail, Pu the device until it click.
- To remove the device, pull the clamp down with a flat screwdr device up to remove from DIN rail.