MENU DESCRIPTION

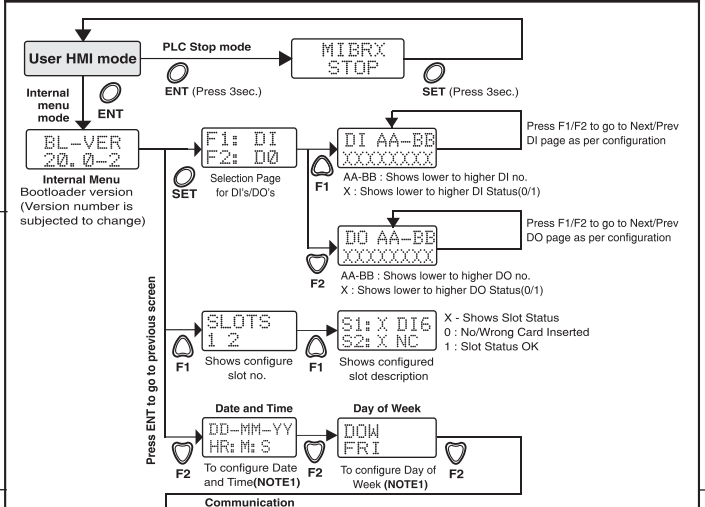

Edit Configuration Settings:

	KEY	SET		F1	F2	ENT
NOTE 1	FUNCTION	Edit enable (Press 3 sec.)	Shift cursor position	Decrement value	Increment value	Save value

NOTE 2 : To adjust STOP bit of Communication settings, refer SELPRO software project setting

Enter Bootloader mode: PON → Selec → INTL.... → BL-VER 20.0-2 (Bootloader mode)

ENT (Press 3sec.)

NOTE- For display nomenclature, refer MIBRX-72-X-X-230V operating instruction.

? SERVICE DETAILS

This device contains no user serviceable parts and requires special equipment and specialized engineers for repair.
Maintenance: Do not use Isopropyl alcohol or any other organic solvents for cleaning.
Please contact service center for repair on the following numbers : **Tel. No. :** + 91-7498077172 ;
Email : service@selec.com

(Specifications are subject to change, since development is a continuous process.)

Selec Controls Pvt. Ltd., India
Factory Address : EL-27/1, Electronic Zone, TTC Industrial Area MIDC, Mahape,Navi Mumbai- 400 710,INDIA.
Tel. No : +91-22-41 418 419/430 IFax No. : +91-22-28471733
Toll free : 1800 227 353 (BSNL/MTNL Subscribers only)
Website : www.selec.com I Email : sales@selec.com