MRJ4M-QUAD

Multifunction Meter

DIN 70mm

Features :

- 3Ø True RMS (Voltage, Current)
- 3Ø Power (Active, Reactive, Apparent)
- 3Ø Energy (Active, Reactive, Apparent)
- Monitors electrical parameters for 4 loads (3Ø), 12 loads (1Ø)
- RS485 communication MODBUS RTU protocol
- Energy (Active, Reactive, Apparent)
- Self powered

Certification : CE

Display specifications

Display	LCD with Backlight, 3 rows
Digits	1 row of 4 digits 2 rows of 7 digits
Digit height	0.24"
Resolution	For energy : 0.01k, 0.1k, 1k, 0.01M, 0.1M, 1M (depending upon CT ratio x PT ratio) For Power, Voltage : Auto resolution For Power factor : 0.01 Voltage (L - L / L - N) : ±0.05% of F.S. Current : ±0.05% of F.S., Frequency : ±0.1% Power & Energy (Active, Reactive, Apparent) : 1%
Protection features	Password protected for set-up

Input specifications

Type of measurement	TRUE RMS
Sampling rate	100 Samples / Cycle
Electrical connections	3Ø - 4 wire (Wye), 1Ø - 2 wire (L-N)
Data update rate	
Instantaneous	1 sec
Demand	15 sec
Input-voltage	
PT primary	100V to 10kV (Programmable for any Value)
PT secondary	100V to 500V AC(L-L) (Programmable for any value)
Voltage nominal	240V AC L-N / 415V AC L-L
Measured V with full range	60 to 300V AC, 50 / 60Hz, Self-Supplied, (V1, N)
Permanent overload	750V AC L-L
Impedance	≥0.8MΩ
Frequency range	45 - 65Hz
VA burden	<0.2VA at 300V AC L-N / Phase
Input-current	
CT ratings primary	1 / 5A up to 10kA (Programmable for any Value)
CT ratings secondary	330mV
Current nominal	330mV
Measured Amps with over range & Crest factor	3.3mV to 396mV
Frequency range	45 - 65Hz

Measurement accuracy	
Current	±0.5% of F.S.
Voltage	±0.5% of F.S.
Power factor	±0.01
Power	1%
Frequency	±0.1%
Active energy	1%
Reactive energy	1%

Output specifications

Device ID & Parity	1 to 255 & None, Odd, Even
Protocol & Interface	RS485 and MODBUS RTU
Baud rate	300, 600, 1200, 2400, 4800, 9600, 19200 baud
Transmission mode	Half duplex
Transmission distance	500 meter maximum
Transmission speed	300, 600, 1200, 2400, 4800, 9600, 19200 baud
Stop bits	1 or 2
Response time	100 ms (Max and independent of baud rate)
Isolation	2kV RMS

Mechanical specifications

Weight	290 gms (10 Oz)
Material	LEXAN 923- 7035 GREY
IP degree of protection	(IEC 60529) IP51 Front only
Torque at terminals	0.68 N-m to 0.79 N-m
Mounting position	Din Rail

Auxiliary supply specifications

Supply voltage	60 to 300V AC, 50 / 60Hz, Self -Supplied, (V1, N)
Burden	< 6 VA at 277V L-N
Frequency	50 / 60 Hz nominal
Ride-through time	100 ms typical at 120V AC and maximum burden 100 ms typical at 277V AC and maximum burden

Environmental specifications

Operating temperature	Meter -10°C to +55°C (14°F to 131°F)
Storage temperature	Meter -20°C to +75°C (-4°F to +167°F)
Humidity	Up to 85% RH (Non-Condensing)
Altitude	Up to 2000 meters (6561 ft.)
Measurement category	CAT III
Pollution degree	2
Product life	> 5 years

Dimensions (All are in mm)

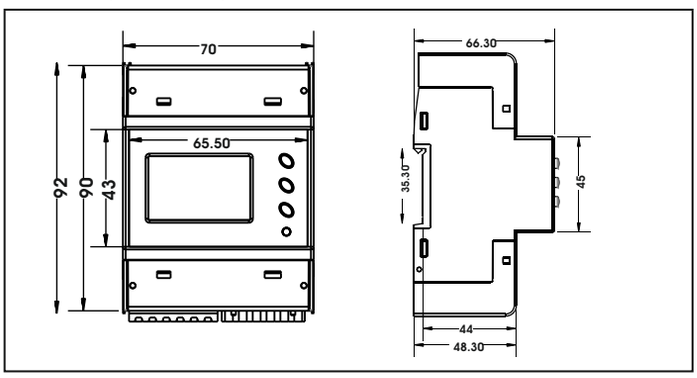

Terminal connection

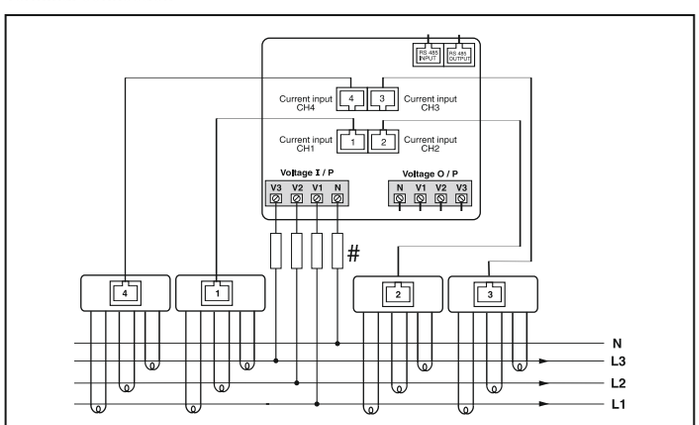

IEC Cable Size (mm²) : 0.5 to 2.5 ; Tightening Torque (N - m) : 0.68 to 0.79

Compliance

Applicable EMI / EMC Standards	
Product Standard : IEC 61326 - 1	
Category	**Standards compliance**
Electrostatic discharge	IEC 61000 - 4 - 2
Immunity to electromagnetic RF fields	IEC 61000 - 4 - 3
Conducted immunity	IEC 61000 - 4 - 6
Immunity to magnetic fields	IEC 61000 - 4 - 8
Immunity to voltage dips and interruptions	IEC 61000 - 4 - 11
Fast transient	IEC 61000 - 4 - 4
Immunity to surge waves	IEC 61000 - 4 - 5
Conducted and radiated emissions	CISPR-22 / CISPR-11
Safety and Standards	
IEC61010 Edition 3.0 CAT III, Protection class II	
IEC 61326 - 1	
CAT III up to 480 V L-L CAT II up to 600 V L-L	
CAT III up to 300 V L-N	
As per IEC/UL 61010-1 Ed-3	

Ordering information

Product code	Supply voltage	Output	Certification
MRJ4M-QUAD	Self Supplied (V1, N) 60 to 300V AC	Comm. (RS485)	CE