selec

600XU (17.5mm)

Operating Instructions

600XU is a multifunction timer with 13 functions and 10 time ranges from 0.1 Sec ~ 1 Sec to 0.3 Hr. ~ 3Hr.

Top knob:- This knob has 10 steps. The function of this knob to select a time range. Each step of this knob gives times ranges as below

0.1~1 Sec, 0.3~3 Sec, 1~10 Sec, 3~30 Sec, 0.1~1 Min, 0.3~3 Min, 1~10 Min, 3~30 Min, 0.1~1 Hr, 0.3~3 Hr.

Middle knob: This knob allows the user to set desired time period to execute the function within the time range selected through top knob. This knob also has 10 steps. For example, top knob is selected at 3rd position which selects the timer in 0~10 Sec time range and the middle knob is selected at position 5, then timer will operate for 5 Second or will consider "T" = 5 Sec as per the timing diagrams explained further.

Bottom knob:- This knob selects 1 of the 13 functions as mentioned next in each timing diagram.

**** The timer adjustments/programming must be made in the power OFF condition ****

SPECIFICATIONS

SUPPLY VOLTAGE	: 20-240V AC,12-240V DC, AC : (50 / 60 Hz)
OUTPUT CONTACT	: 1 C/O (SPDT)
RELAY RATING	: NO/5A, NC/3A@250V AC
TIME RANGES	: 0.1 - 1 sec, 0.3 - 3 sec, 1 - 10 sec, 3 - 30 sec 0.1 - 1 min, 0.3 - 3 min, 1 - 10 min, 3 - 30 min 0.1 - 1 hr, 0.3 - 3 hr
ACCURACY	: Setting: ± 5% of full scale Repeat: ±0.5%
POWER CONSUMPTION	: 4VA max.
RESET TIME	: Less than 100 msec.
SIZE (IN MM)	: 17.5(W) x 90(H) x 60(D)
HOUSING	: Flame retardant engineering plastic.
MOUNTING	: DIN rail mounting.
TEMPERATURE	: Operating: 0 to 50°C Storage: -20 to 75°C
HUMIDITY	: Up to 95% RH.
CONNECTING CAPACITY	: Rigid: 1 x 4mm^2 - 2 x 2.5mm^2 Flexible with ferrules: 1 x 2.5mm^2 - 2 x 1.5mm^2
TIGHTENING TORQUE	: 0.6 to 0.8 Nm
WEIGHT	: 64 gms

Please maintain these instructions and review them before using the unit:

Warning :

Please maintain these instructions and review them before using the unit:

1. The equipment is built-in type with Class II construction and is protected by reinforced insulation.

2. The power should be turned off while wiring and maintenance to prevent the risk of electric shock. Do not touch any terminal when the power is ON.

3. Wiring shall be done strictly according to the terminal layout with shortest connections.

4. Fuse Protection: The equipment does not have Built-in fuse. External fuse of rating 275 DC / 1 A is recommended.

Caution:

1. This unit is not intended for outdoor use.
2. Field installed conductors shall be rated 75°C only
3. The output connections must not be loaded beyond the specified values/range.
4. Avoid inflow of dust and contact of conductive material with the internal circuitry of the unit.
5. Clean the equipment with a soft cloth. Do not use any organic solvents like Isopropyl alcohol for cleaning.

FRONT PANEL DESCRIPTION

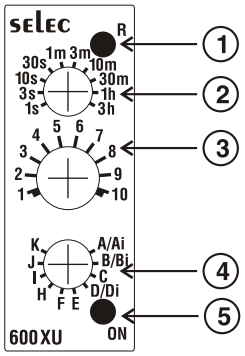

(1) - **Green LED Indicates Relay ON**

(2) - **Knob for time range selection**

(3) - **Knob for time selection (The marking 1 to 10 represent timing in proportion to the full scale time range)**

(4) - **Knob for operating mode selection**

(5) - **Red LED Indicates Power ON**

TERMINAL CONNECTION

Terminal	Description	
A1	L (+)	TIMER SUPPLY
A2	N (-)	TIMER SUPPLY
15	COM	RELAY CONTACT
16	NC	RELAY CONTACT
18	NO	RELAY CONTACT
25	Y CONTACT	

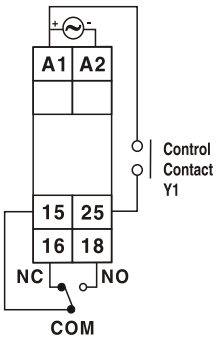

TYPICAL LOAD CONNECTIONS

1. For load current less than 0.5A

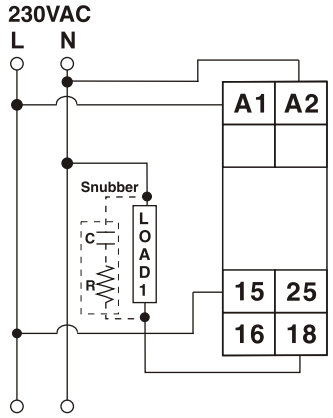

2. For bigger loads, use interposing relay/contactor

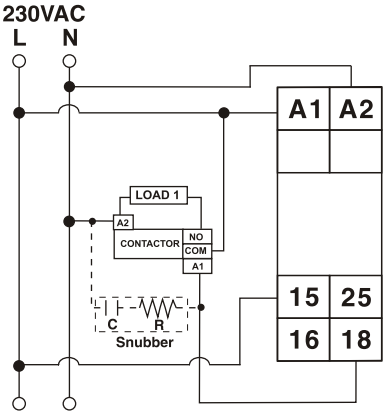

MECHANICAL INSTALLATION

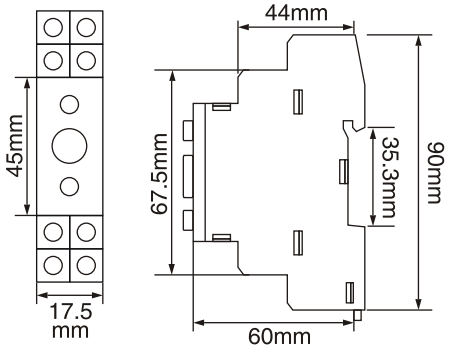

MODE OF OPERATION

A **Function:** ON Delay

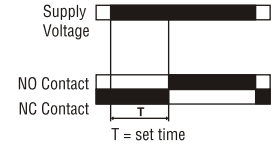

B **Function:** Interval

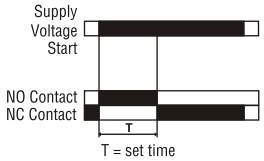

C **Function:** Cyclic Equal OFF First

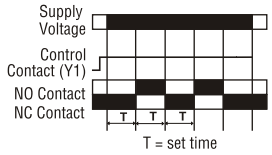

Ci **Function:** Cyclic Equal ON First

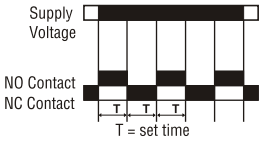

D **Function:** Pulse Output

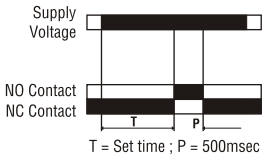

E **Function:** Delay On Break

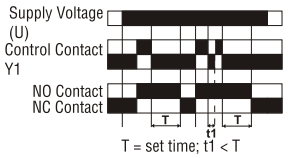

F **Function:** Delay On Make / Break

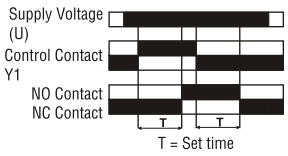

H **Function:** Interval After Break

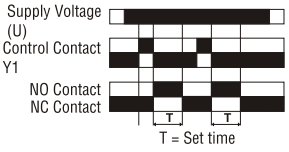

I **Function:** Single Shot

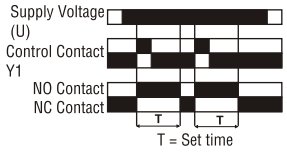

J **Function:** Retriggable Single Shot

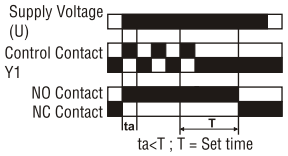

K **Function:** Latching Relay

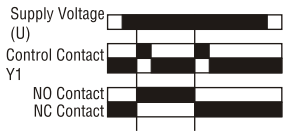

Ai **Function:** Delay With Totalise

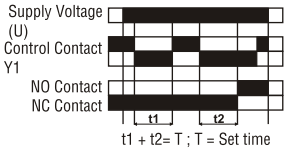

Bi **Function:** Interval With Totalise

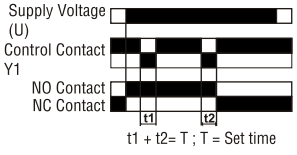

(Specifications are subject to change, since development is a continuous process)

Selec Controls Pvt. Ltd., India

Factory Address :

EL-27/1, Electronic Zone, TTC Industrial Area, MIDC, Mahape, Navi Mumbai - 400 710, INDIA.
Tel. No. : +91-22-241418468 / 452. Email: sales@selec.com

www.selec.com