[redacted]

ally becomes a
se the terminals do
er installation and

h the internal
ead to a safety
ause electrical

nstalled between
ilitate power 'ON' or
eaker must be
accessible to the

e external current
re that the current
of electrical shock

in environmental
his manual.
pe fuse.
AC/0.5A for
mended.

OP1371-V02

Panel cutout dimensions (in mm)

MA12/MV15

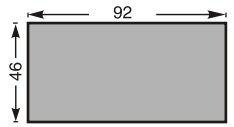

MA202/MV205

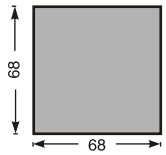

MA302/MV305

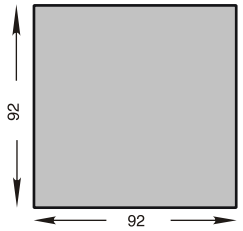

MOUNTING

1. Insert meter into panel & ensure self lock clamps are fit.

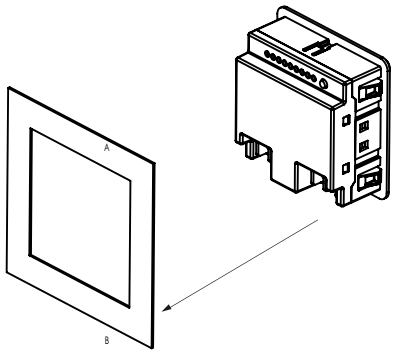

If the panel thickness is greater than 1.2mm and less than 5mm, use clamps.

2. Fix the clamp into slot and pull up to lock the clamp.
   (Ensure that clamp are locked properly)
   Assemble the clamp (as shown in fig) in their respective slot.

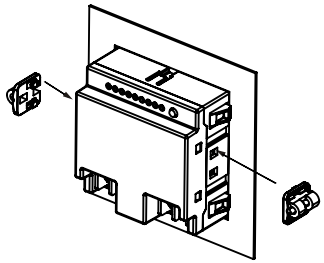

3. Tight the screws as per shown in figure.

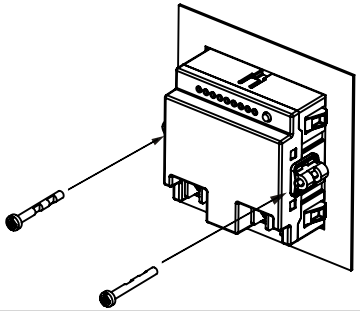

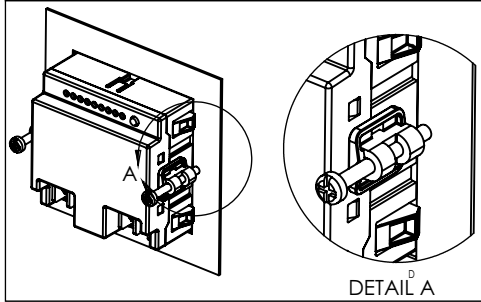

DEMOUNTING

1. Remove the screw from clamp as shown in fig.

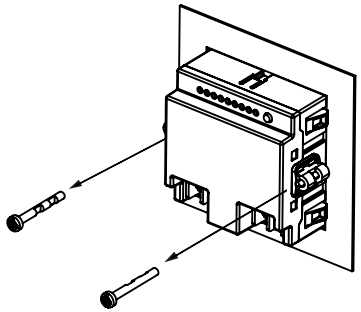

2. Pull down the clamp towards the FR bezel and remove clamp.

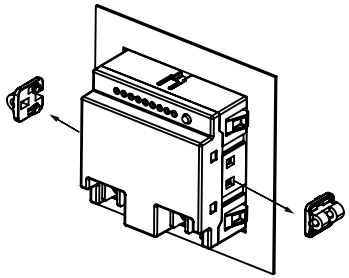

3. Remove meter from panel.

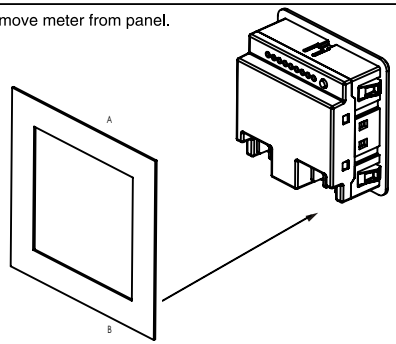

TERMINAL CONNECTIONS

MV15 / MV205 / MV305

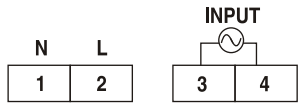

MA12 / MA202 / MA302

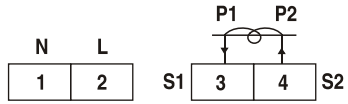

Clamps are available on request

WIRING DIAGRAM

Case 1 for MV15 / MV205 / MV305

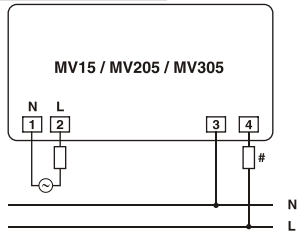

Case 2 for MV15 / MV205 / MV305

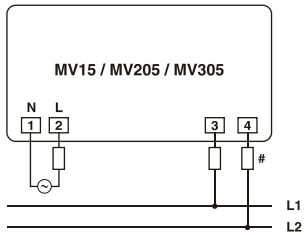

MA12 / MA202 / MA302

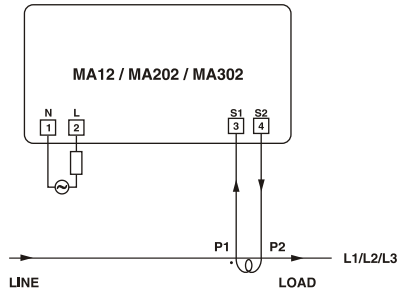

 # All fuse types : 0.5A class CC UL type ; 0.5A fast acting 600V

(Specifications are subject to change, since development is a continuous process.)

Selec Controls Pvt. Ltd.

Factory Address : EL-27/1, Electronic Zone, TTC Industrial Area, MIDC, Mahape, Navi Mumbai - 400 710, INDIA.
Website : www.selec.com
For Sales & Support,
Tel. No. :+91-22-41418468/452
Mob. No. :+91-9136977315,Email: sales@selec.com
For Service,
Tel.No.: +91-7498077172/ +91-7400069545
Email: service@selec.com