OP1371-V02

selec

# MV & MA SERIES
Operating Instructions

96 x 96mm

72 x 72mm

48 x 96mm

96 x 96mm

72 x 72mm

48 x 96mm

## Ordering information

| Product | Supply range |
|---|---|
| MA12 | 240V AC (± 20%) |
| MA202 | 240V AC (± 20%) |
| MA302 | 240V AC (± 20%) |
| MV15 | 240V AC (± 20%) |
| MV205 | 240V AC (± 20%) |
| MV305 | 240V AC (± 20%) |
| ACC SELFLOCK CLAMP + SCREW | Set of 2 (Available on request) |

## SPECIFICATIONS

### AC VOLTMETER

| | |
|---|---|
| **Product name** | MV15, MV205, MV305 |
| **Description** | 1Ø digital voltmeter |
| **Display** | 3 digit 7 segment LED display |
| **Display range** | 20 to 600V |
| **Input range** | 50 to 600V AC |
| **Input frequency** | 50 / 60Hz |
| **Max continuous input range** | 600V |
| **Over range indication** | "Or" for input > 600V |
| **Input impedance** | 1M (±5%) |
| **Resolution** | 1V |
| **Electrical connection** | 1Ø - 2 wire |
| **Supply voltage(Vn)** | 240V AC (±20%), 50/60Hz |
| **Weight** : | MV15 : 75gm<br>MV205 : 80gm<br>MV305 : 112gm |

### AC AMMETER (CT INPUT)

| | |
|---|---|
| **Product name** | MA12, MA202, MA302 |
| **Description** | 1Ø digital ammeter |
| **Display** | 4 digit 7 segment LED display |
| **Display range** | 0 to 5760A |
| **Input range** | 50mA to 5A AC |
| **Input frequency** | 50/60Hz |
| **Max continuous input range** | 7A |
| **Over range indication** | "Or" for input > 7.2A |
| **CT primary setting** | 5 to 4000 (programmable in steps) |
| **CT secondary setting** | 5A fixed |
| **Resolution** | 0.001, 0.01,0.1,1A (depending upon CT primary setting) |
| **Electrical connection** | 1Ø - 2 wire |
| **Supply voltage** | 240V AC (±20%), 50/60Hz |
| **Weight** | MA12 : 80gm<br>MA202 : 85gm<br>MA302 : 120gm |

| | |
|---|---|
| **Accuracy** | ±0.5% of full scale |
| **Measurement method** | True RMS |
| **Environmental conditions** | Temperature :<br>Operating : -10 °C to 55 °C<br>Storage : -20 °C to 75 °C<br>Humidity : Up to 85% RH (non condensing)<br>Altitude : Up to 2000 meters<br>Pollution degree : II |
| **Installation category** | III (480V), II (600V) |
| **Protection class** | II |
| **Mounting** | Panel mounting |
| **IP** | IP51 (front)<br>IP20 (back) |

## SAFETY PRECAUTIONS

All safety related codifications, symbols and instructions that appear in this operating manual or on the equipment must be strictly followed to ensure the safety of the operating personnel as well as the instrument.

If the equipment is not used in a manner specified by the manufacturer it might impair the protection provided by the equipment.

- Do not use the equipment if there is any mechanical damage.
- Ensure that the equipment is supplied with correct voltage.

⚠ **CAUTION**

1. Read complete instructions prior to installation and operation of the unit.
2. Risk of electric shock.
3. The equipment in its installed state must not come in close proximity to any heating sources, caustic vapors, oils, steam, or other unwanted process by products.

## WIRING GUIDELINES

⚠ **WARNING**

1. To prevent the risk of electric shock, power supply to the equipment must be kept OFF while doing the wiring arrangement.
2. Wiring shall be done strictly according to the terminal layout. Confirm that all connections are correct.
3. Use lugged terminals.
4. To reduce electromagnetic interference use of wires with adequate ratings and twists of the same in equal size shall be made with shortest connections.
5. Layout of connecting cables shall be away from any internal EMI source.
6. Cable used for connection to power source, must have a Cross section of 0.5mm$^2$ to 2.5mm$^2$(20 to 14AWG; 75°C(min)). These wires shall have current carrying capacity of 7.5A.
7. Copper cable should be used (Stranded or Single core cable)
8. Before attempting work on device, ensure absence of voltages using appropriate voltage detection device.

## INSTALLATION GUIDELINES

⚠ **CAUTION :**

1. This equipment, being built-in-type, normally becomes a part of main control panel and in such case the terminals do not remain accessible to the end user after installation and internal wiring.
2. Conductors must not come in contact with the internal circuitry of the equipment or else it may lead to a safety hazard that may in turn endanger life or cause electrical shock to the operator.
3. Circuit breaker or mains switch must be installed between power source and supply terminals to facilitate power 'ON' or 'OFF' function. However this switch or breaker must be installed in a convenient position normally accessible to the operator.
4. Before disconnecting the secondary of the external current transformer from the equipment, make sure that the current transformer is short circuited to avoid risk of electrical shock and injury.
5. The equipment shall not be installed in environmental conditions other than those mentioned in this manual.
6. The equipment does not have a built-in-type fuse. Installation of external fuse of rating 275V AC/0.5A for electrical circuitry / battery is highly recommended.

## MECHANICAL INSTALLATION

For installing the meter:

1. Prepare the panel cutout with proper dimensions as shown below.
2. Push the meter into the panel cutout. Secure the meter in its place by pushing it into panel cutout.
3. For proper sealing, tighten the screws evenly with required torque.
   Terminal screw tightening torque :
   0.68 N-m to 0.79 N-m (6.018 In-Lb to 6.992 In-Lb)
   Screw clamp tightening torque : 0.1N-m (0.885 Lb-inch)

### MAINTENANCE

1. The equipment should be cleaned regularly to avoid blockage of ventilating parts.
2. Clean the equipment with a clean dry or damp cloth. Do not use any cleaning agent other than water.

## INSTALLATION

For mounting and demounting of the meter, prepare the panel cutout with proper dimension as per below

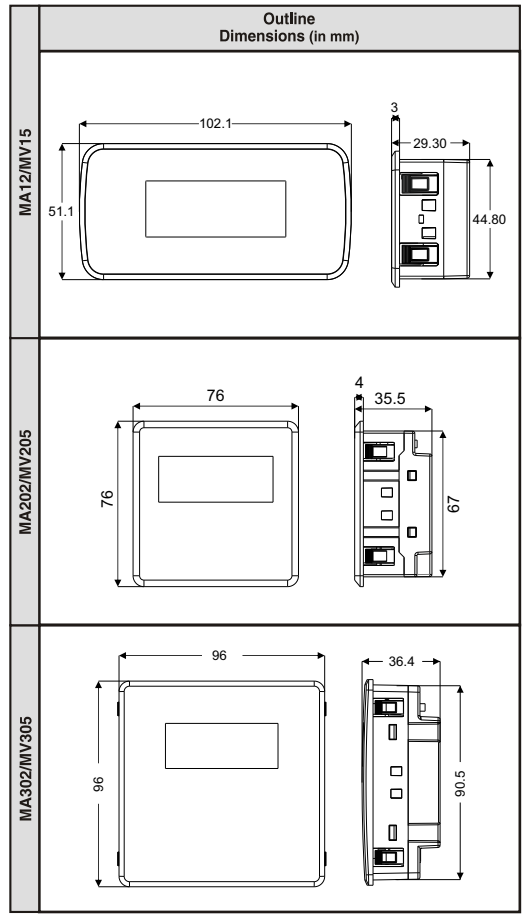

OP1371-V02

**Panel cutout dimensions (in mm)**

MA12/MV15

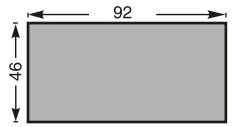


MA202/MV205

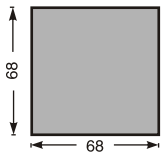


MA302/MV305

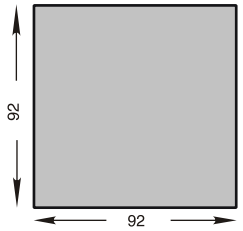


## MOUNTING

1. Insert meter into panel & ensure self lock clamps are fit.

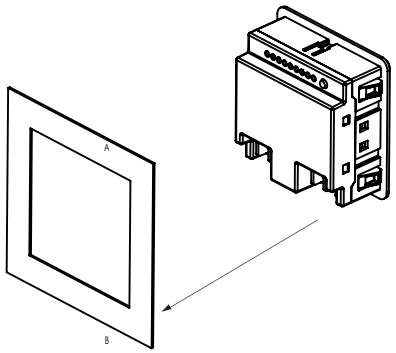


**If the panel thickness is greater than 1.2mm and less than 5mm, use clamps.**

2. Fix the clamp into slot and pull up to lock the clamp.
   (Ensure that clamp are locked properly)
   Assemble the clamp (as shown in fig) in their respective slot.

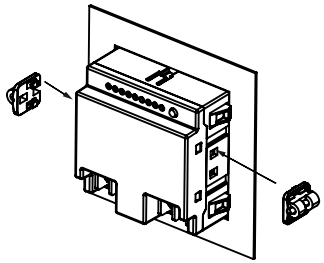

3. Tight the screws as per shown in figure.

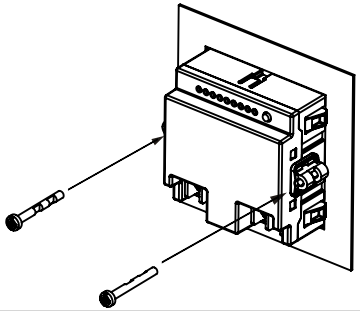

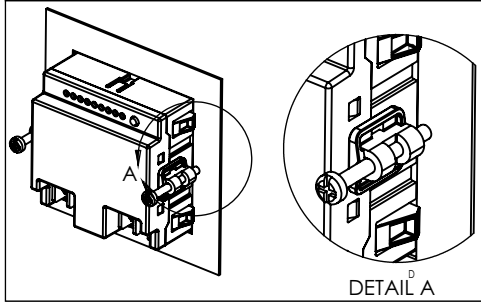


## DEMOUNTING

1. Remove the screw from clamp as shown in fig.

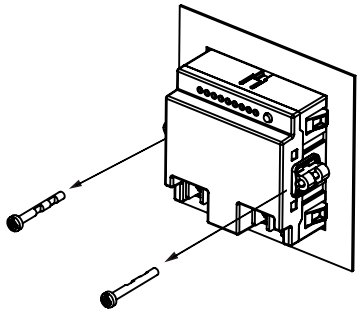

2. Pull down the clamp towards the FR bezel and remove clamp.

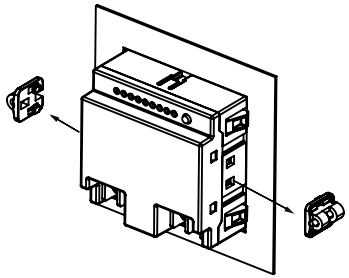

3. Remove meter from panel.

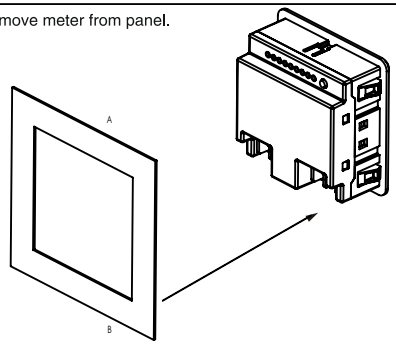


## TERMINAL CONNECTIONS

**MV15 / MV205 / MV305**

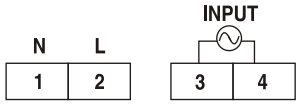


**MA12 / MA202 / MA302**

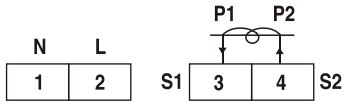


**Clamps are available on request**

## WIRING DIAGRAM

**Case 1 for MV15 / MV205 / MV305**

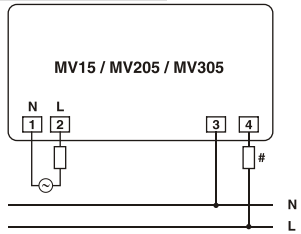


**Case 2 for MV15 / MV205 / MV305**

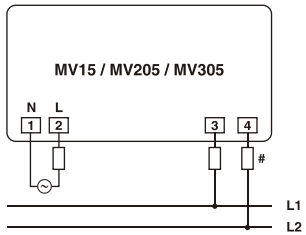


**MA12 / MA202 / MA302**

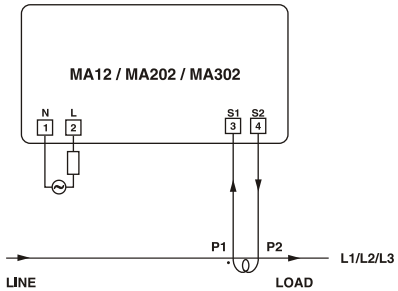


**# All fuse types :** 0.5A class CC UL type ; 0.5A fast acting 600V

(Specifications are subject to change, since development is a continuous process.)


**Selec Controls Pvt. Ltd.**

**Factory Address :** EL-27/1, Electronic Zone, TTC Industrial Area, MIDC, Mahape, Navi Mumbai - 400 710, INDIA.
**Website :** www.selec.com
**For Sales & Support,**
**Tel. No. :**+91-22-41418468/452
**Mob. No. :**+91-9136977315,Email: sales@selec.com
**For Service,**
**Tel.No.:** +91-7498077172/ +91-7400069545
**Email:** service@selec.com