,QVWDOODWLRQ RI LQYHUWHU

*7, 6(5,(6 LQYHUWHU LV GHYHORSHG IRU XVHSLQ DQ RXWGRRU DYRLG 56 ZLWK ,3 GLUHFW FRQWDFW RI LQYHUWHU ZLWK VXQOLJKW UDLQIDOO DQG VORZIDOO)LJ VKRZV LGHDO ORFDWLRQV IRU LQVWDOODWLRQ RI LQYHUWHU

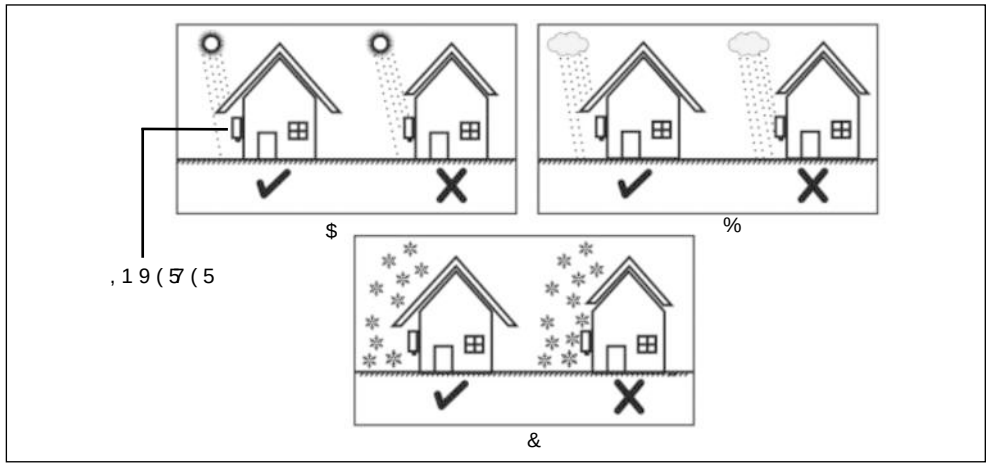

)LJ

,GHDO LQVWDOOLQJ SRVLWLRQ VKRZQ LQ ILJ

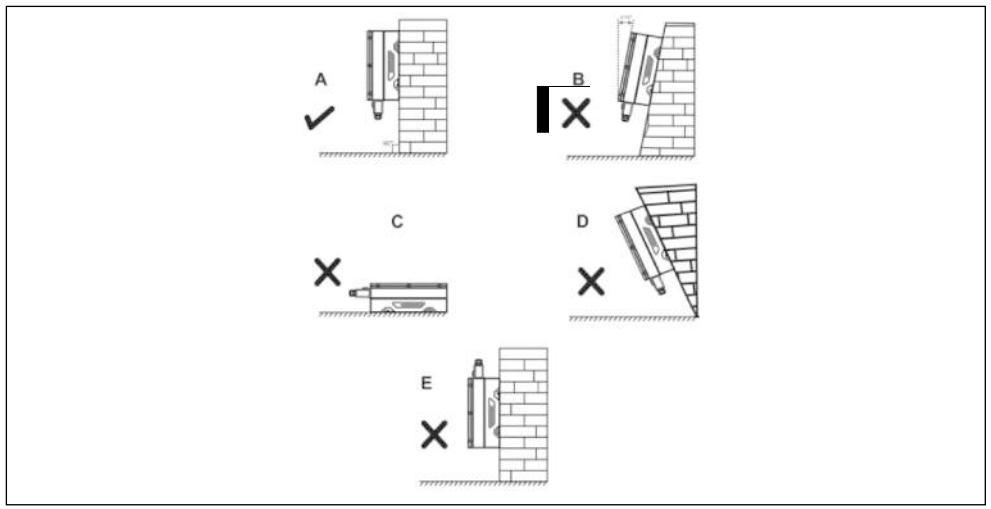

)LJ

127,&(

‡ 0RXQW WKH *7, 6(5,(6 LQYHUWHU RQ ULJLG VWURQJ ZDOO LQ VXFK ZD\ WKDW LW FDQ KDQGOH ZHLJKW RI LQYHUWHU
‡ 0RXQW LQYHUWHU RQ VXFK D KHLJKW WKDW FRPPLVVLRQLQJ GHFRPLVVLRQLQJ WXUQLQJ 21 DQG WXUQLQJ
2)) LV HDVLO\ SRVVLEOH

&RPPXQLFDWLRQ 0RGXOH &RQQHFWLRQV

&RQILJXUDWLRQ

3LQ GHVFULSWLRQ RI 56 &RPPXQLFDWLRQ WHUPLQDO LV JLYHQ

3LQ 1RWDWLRQ	)XQFWLRQ
$	'DWD
$	'DWD

7DEOH

&RQQHFWLQJ VLQJOH LQYHUWHU IRU 56 FRPPXQLFDWLRQ

‡ &RQQHFW $ SLQ RI 56 SRUW WR WKH 'DWD 'DWD

)ROORZLQJ GDWD IRUPDW LV XVHG IRU &RPPXQLFDWLRQ

'DWD)RUPDW

%DXG UDWH

'DWD ELWV

6WRS ELW

3DULW\ 121(

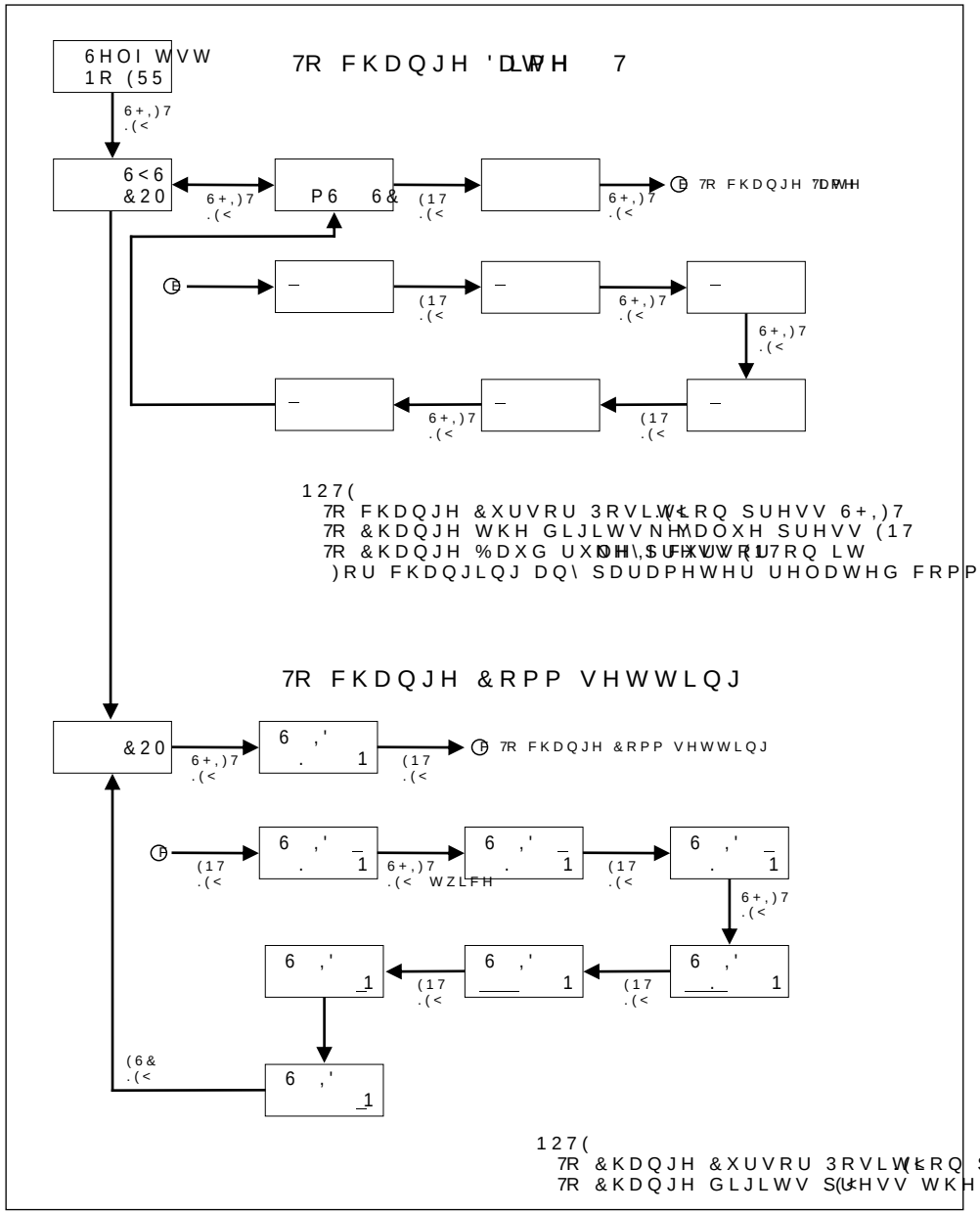

)LJ

&OHDUDQFH IRU LQVWDOODWLRQ

,QVWDOO LQYHUWHU RQ ZDOO ZLWK PLQLPXP FOHDUHQFH DV VKRZ

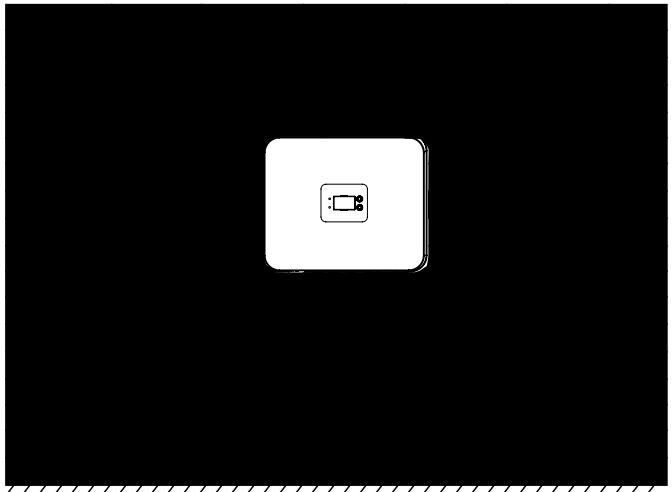

)LJ

7R LQVWDOO PRUH WKDQ RQH LQYHUWHU LQ V\VWHP FRQQHFW EH IRU
SURYLGHG IRU HDV\ LQVWDOODWLRQ UHPRYDO KHDW GLVVLSDWLR

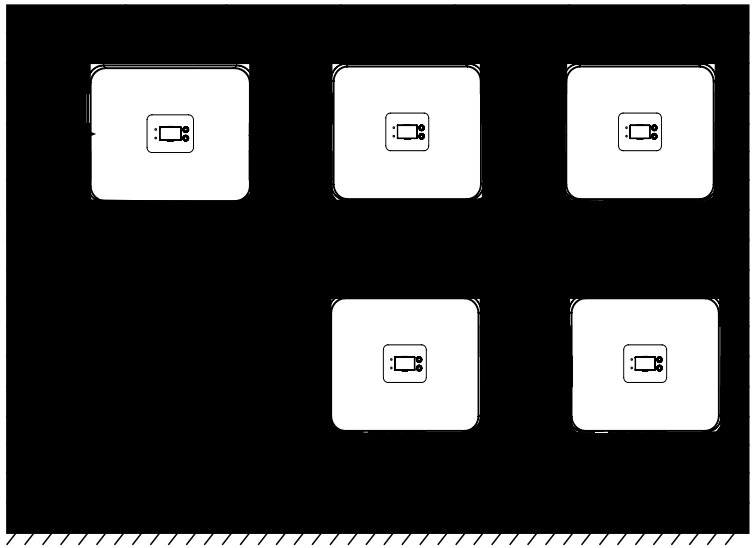

)LJ

ZZZVHOHF FRP

0RXQWLQJ LQYHUWHU RQ ZDOO

6WHSV WR PRXQW LQYHUWHU ZLWK EUDFNHW

6WHS 'ULOO WKUHH KROHV RQ ZDOO DW GLVWDQFH RI LQYHUWHU PRXQWLQJ SRVLWLRQ DV VKRZQ LQ ILJ LQVHUW VHOI WDSSLQJ VFUHZ LQ KROHV

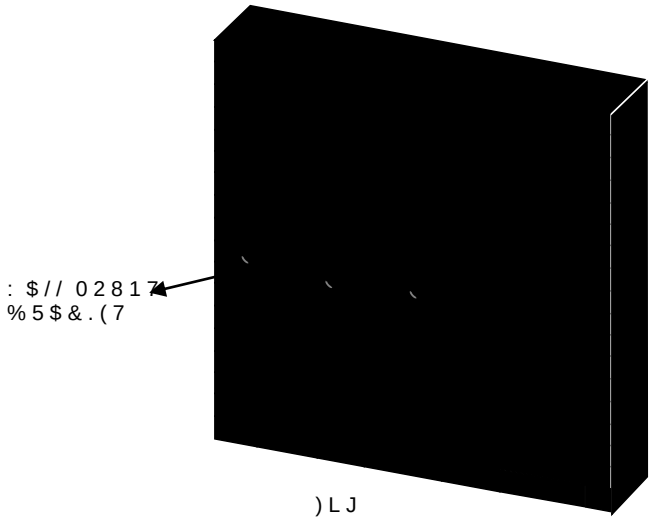

)LJ

6WHS0RXQW LQYHUWHU RQ 0RXQWLQJ %UDFNHW WLWK WKHOS RI WDQG HQVXUH LQYHUWHU LV SURSHUO\ ILWWHG RQ EROW DV SHU ILJ

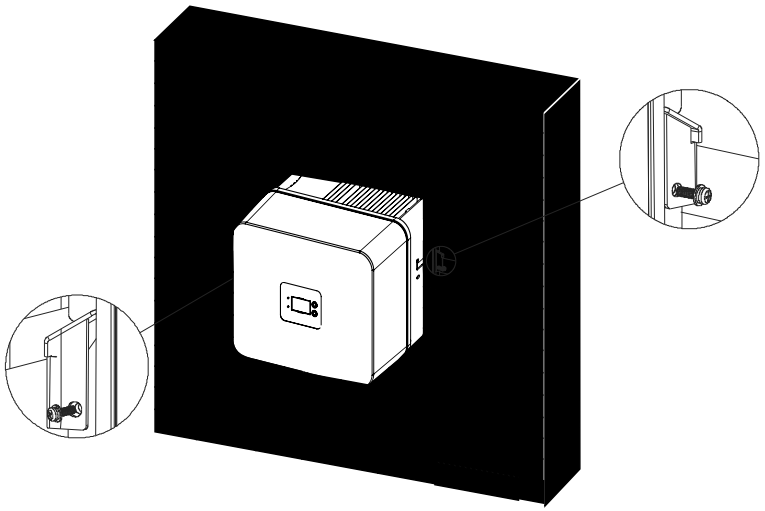

)LJ

,19(57(5 *7, 6(5,(6 8VHU 0DQXD

& 3RZHU ([SRUW &RQWURO

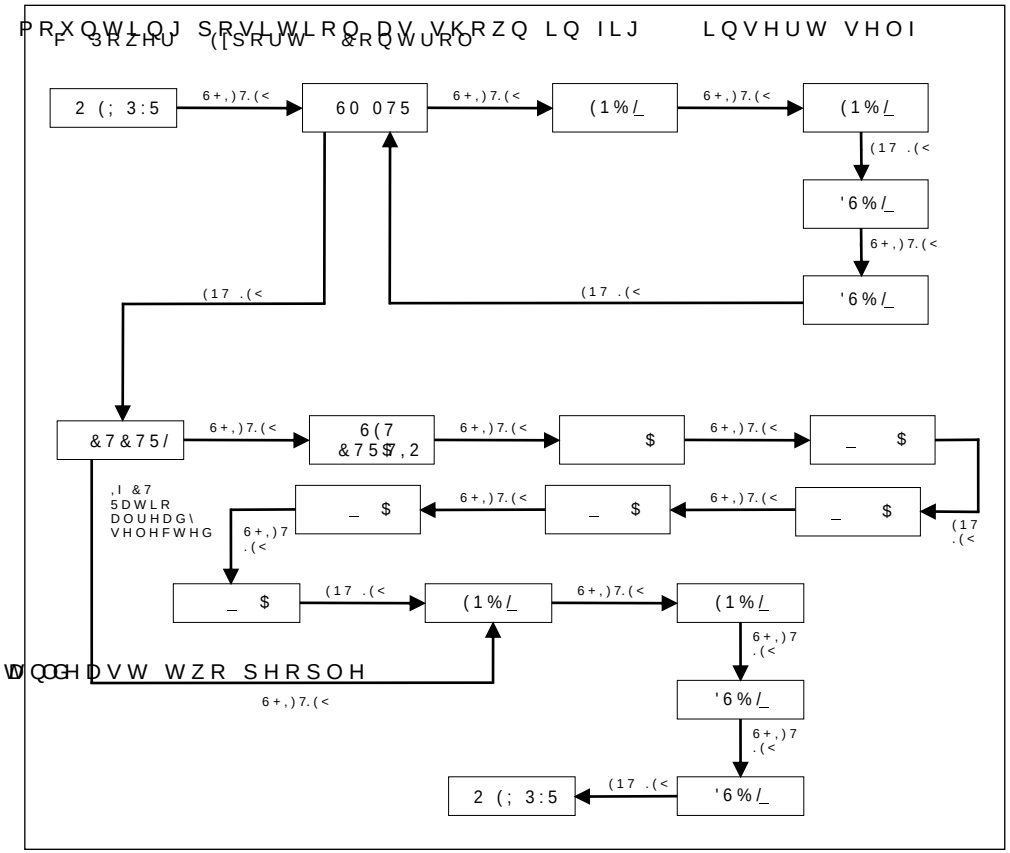

)LJ

ZZZVHOHF FRP

,19(57(5 *7, 6(5,(6 8VHU 0DQXDO

% / &' .(<)81&7,21$/,7<

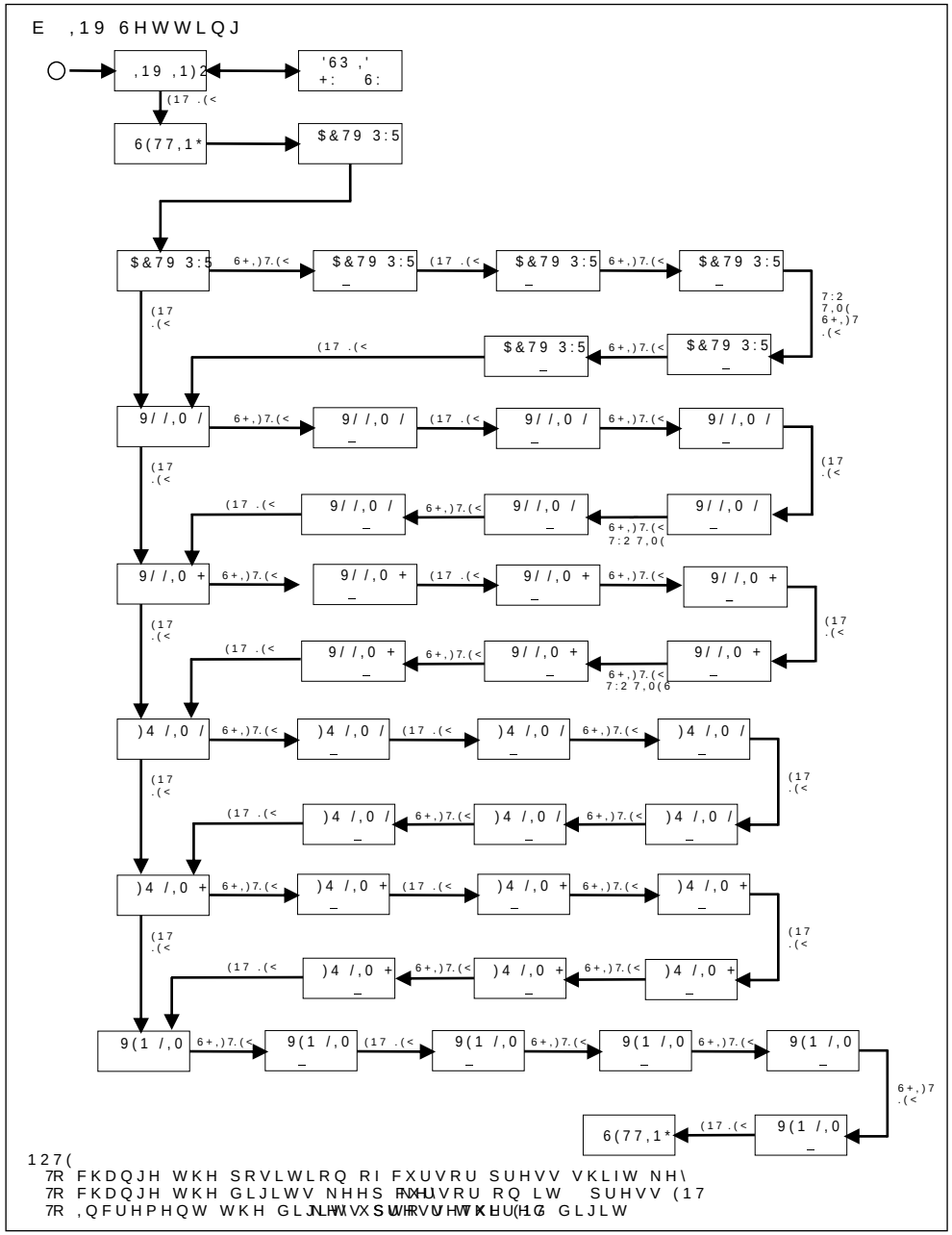

)LJ

(OHFWULFDO FRQQHFWLRQV

7KLV VHFWLRQ KDV LQVWUXFWLRQV RQ HOHFWULFDO FRQQHFWLRQV WR 0, 6(5
FRQQHFWLRQ KDV WR EH SHUIRUPHG E\ TXDOLILHG DQG DXWKRULV

&DXWLRQ

!

&KHFN LI '& 'LVFRQQHFW VZLWFK LV LQ 2)) SRVLWLRQ DV VKRZQ L

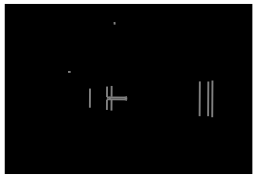

: DUQLQJ

!

- :KHQHYHU D 39 DUUD\ LV H[SRVHG WR WKH DLU WKH FRQGLWLRQ DQG WHUPLQDOV DUH RSHQ &RYHU 39 DUUD\ ZLWK RSDTXH PDWHULD
- (QVXUH VWULQJ V RSHQ FLUFXLW YROWDJH VKRXOG EH OHVV WK $SSO\LQJ PRUH YROWDJH FDQ GDPDJH LQYHUWHU
- 'R QRW GLVFRQQHFW $& '& FDEOHV XQGHU ORDG FRQGLWLRQ

'& &RQQHFWLRQ WR LQYHUWHU

0RGHO	&XUUHQW 5DWLQJ	:LUH 6L]H
*7, :/0 3:	$	VT PP
*7, :/0 3:	$	VT PP
*7, :/0 3:	$	VT PP

'R QRW FRQQHFW 39 DUUD\ SRVLWLYH WHUPLQDO RU QHJDWLYH
0DNH VXUH 39 FRQQHFWRU V 0DOH IHPDOH SRODULW\ LV SUR
&RQQHFW 39 FRQQHFWRUV DV VKRZQ LQ ILJ
0DNH VXUH FRQQHFWRUV WR ,QYHUWHU '& WHUPLQDO DUH FRQQ

ZZZVHOHF FRP

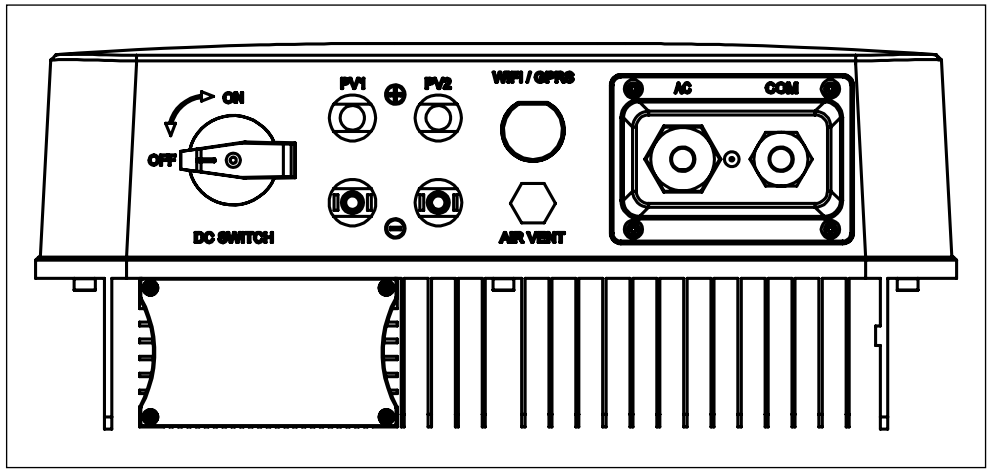

)LJ

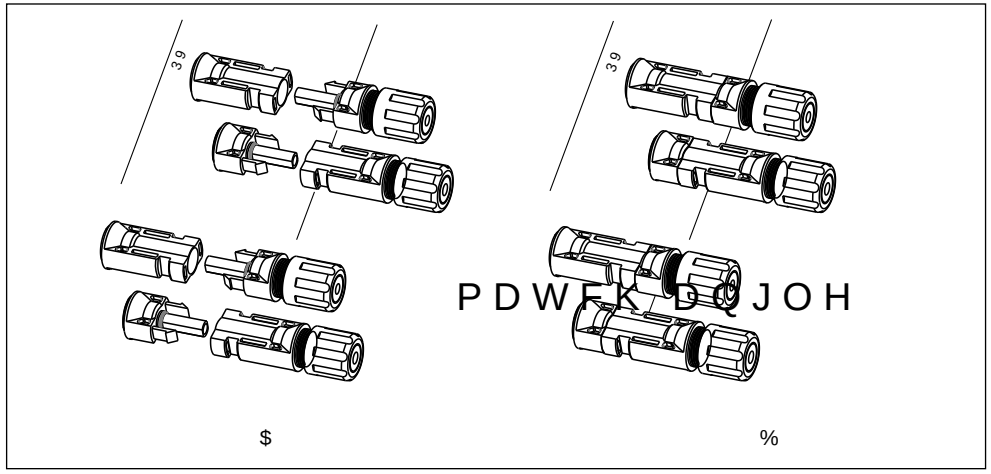

)LJ

$& &RQQHFWLRQV

&DXWLRQ

‡)RU WKH SXUSRVH RI RYHU FXUUHQW SURWHFWLRQ XVH FLUFXLW EUHDNHU EHWZHHQ LQYHUWHU XWLOLW\ JULG
8VH $ DF9 UDWHG&LUFXLW EUHDNHU
‡ 'R QRW FRQQHFW DQ\ ORDG EHWZHHQ LQYHUWHU *ULG VLGH FLUFXLW EUHDNHU
‡ %HIRUH VWDUWLQJ FRQQHFWLRQ PDNH VXUH WKDW FLUFXLW EUHDNHU LV 2))

$ /&')ORZ &KDUW

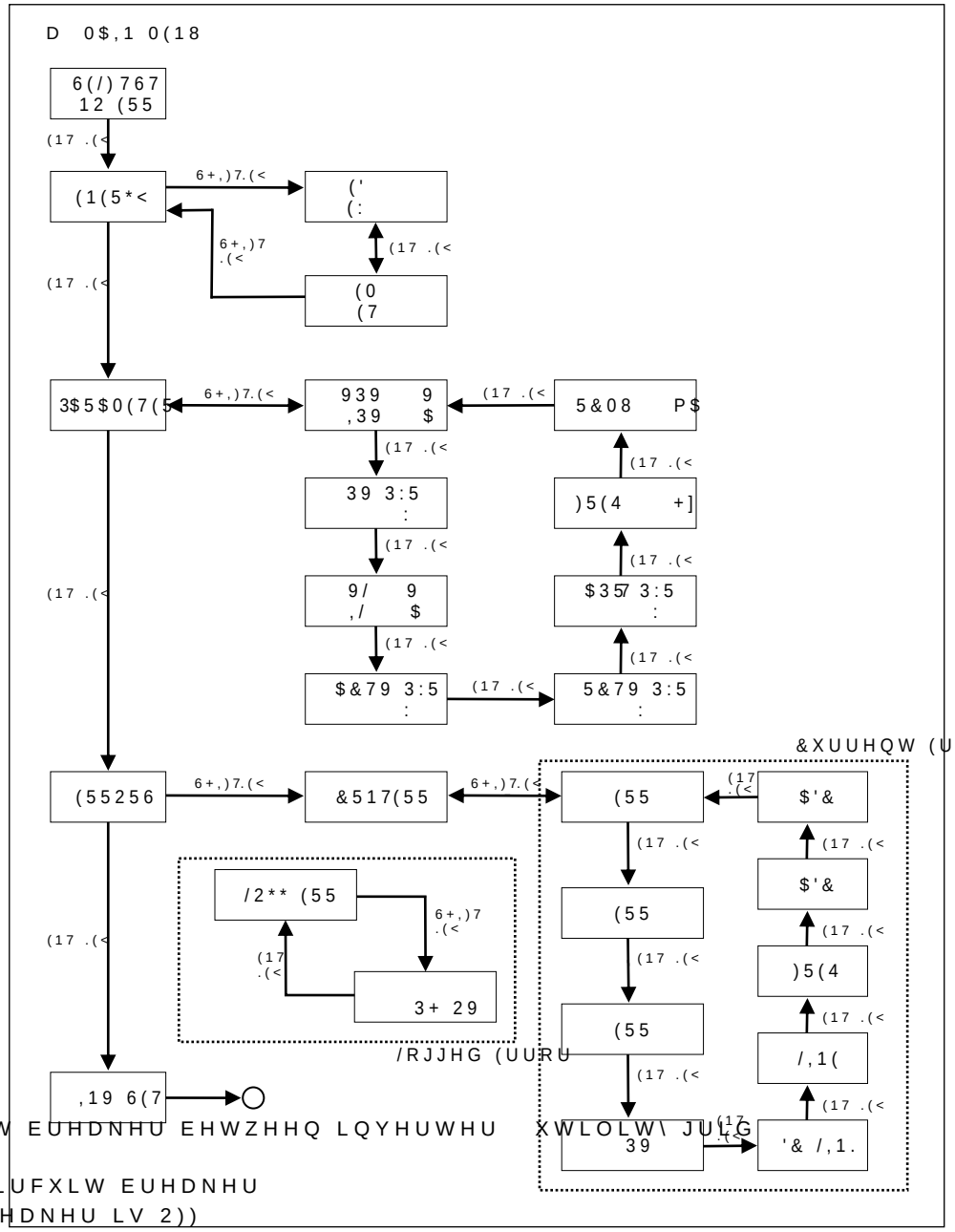

)LJ

,19(57(5 *7, 6(5,(6 8VHU 0DQXDO

$& *URXQGLQJ

*ULG V HDUWK WHUPLQDO PXVW EH FRQQHFWHG WR LQYHUWHU V SURWHFWLYH HDUWK 3(WHUPLQDO DV VKRZQ LQ)LJ

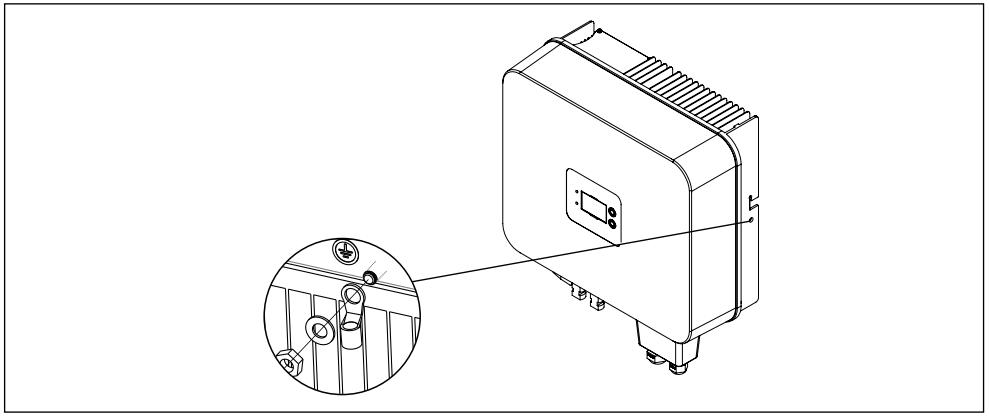

)LJ

/&' .(<$1127$7,216

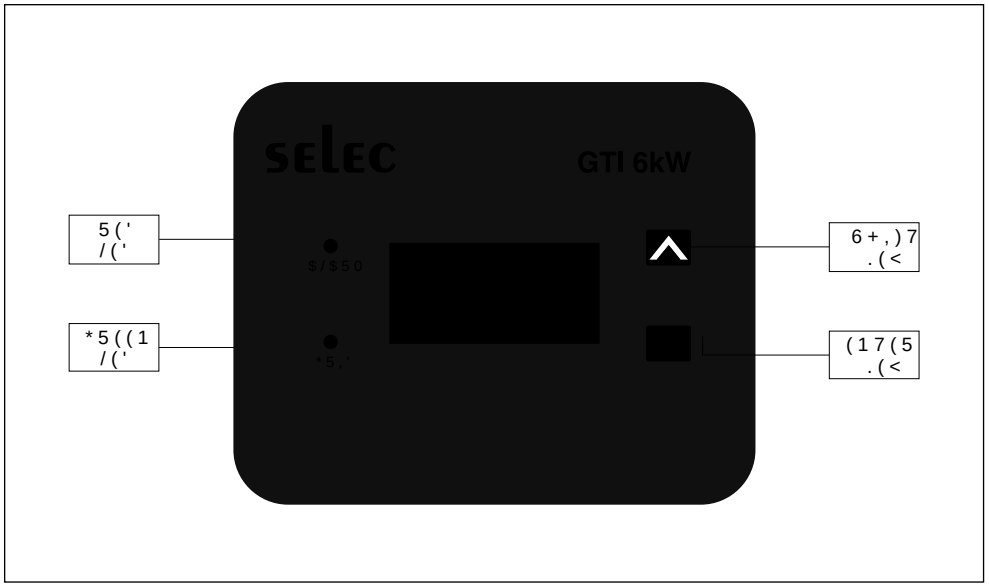

)LJ

6WHS$&RXWSXW :LULQJ

1RWH7KLV LQYHUWHU KDV LQWHJUDWHG UHVLGXDO FXUUHQW PRQLWRULQJ GHYLFH 5&0' WKHQ PXVW XVH RQO\ 7<3($ RU 7<3(% UHVLGXDO FXUUHQW PRQLWRULQJ GHYLFH 5&0'

0RGHO	&XUUHQW 5DWLQJ	:LUH 6L]H
*7, :/0 3:	$	VT PP
*7, :/0 3:	$	VT PP
*7, :/0 3:	$	VT PP

5HPRYH7HUPLQDO &RYHU$QGGDQGRVHQ
8VH 6&UHDEOHV RI VT&PFRQGXFWLRQ
6WULS$LZLUHV DQG SXW OXJV XVLQJ FULPSLQJ WRRO LW ZLOO HQV DYRLG DFFLGHQWDO VKRUWLQJ RI WZR ZLUH
3XW WKHVH&ZRHEQGXLRQWRU VFUHZ LW WLJKWO\
)LJ VKRZV 3&EHRQQHFWLRQV
,QVHUW FRUH$LJHQGUQGK FRYHU DV VKRZQ LQ ILJ
0DNH FRQQHFWLRQV DV VKRZQ LQ)LJ
7LJKWHQHUWKHQ FRYHUDQG SURPHUO\ DV VKRZQ LQ ILJ

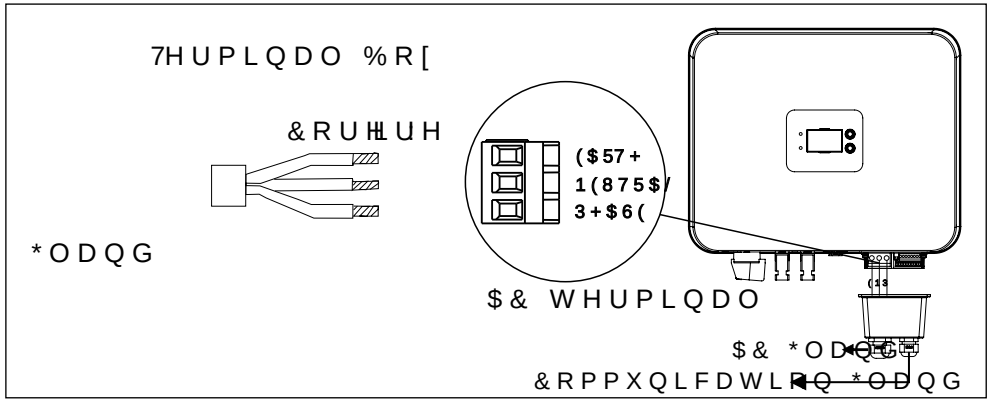

)LJ

ZZZVHOHF FRP

&RPPXQLFDWLRQ 0RGXOH

*7, 6(5,(6 LQYHUWHU V &RPPXQLFDWLRQ WHUPLQDO FRQVLVWV RI 56 FRQQHFWLRQV DV VKRZQ LQ)LJ

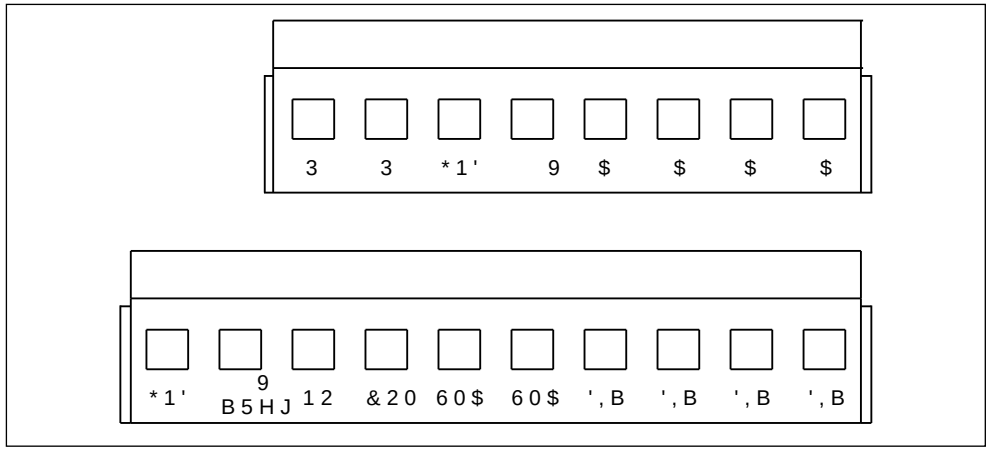

)LJ

&RQQHFWLQJ VLJQDOFDEOH

3,1 12	'HILQLWLRQ	
	*1'	5HJXODWHG 9 6XSSO\
	9B5HJ	
	12	5HOD\ GU\ FRQWDFW
	&20	
	60$	56 6PDUW 0HWHU &RPPXQLFDWLRQ
	60$	
	',B	'LJLWDO LQSXWV
	',B	
	',B	
	',B	
	3	6LJQDO IRU H[SRUW /LPLWDWLRQ
	3	
	*1'	6XSSO\ IRU :,),,
	9	
	$	56 ([WHUQDO &RPPXQLFDWLRQ
	$	
	$	
	$	

7DEOH

3URFHGXUH

,QVWDOODWLRQ RI &7 &RPPXQLFDWLRQ ([WHUQDO &7 &RPPXQLFDWLRQ 6WHSV RI FRPPXQLFDWLRQ ZLULQJ

6WHS 5HPRYH WKH WHUPLQDO FRYHU DQG ORRVHQ FRPPXQLFD

6WHS 6WULS ZLUHV DQG LQVHUW WKHP WKURXJK FRPPXQLFDWI

)LJ

6WHS 8VH EHORZ 6SHFLILHG WRROV IRU WLJKWHQLQJ WKH VFU

6WHS LJKWHQ ZLUHV LQ FRPPXQLFDWLRQ WHUPLQDO

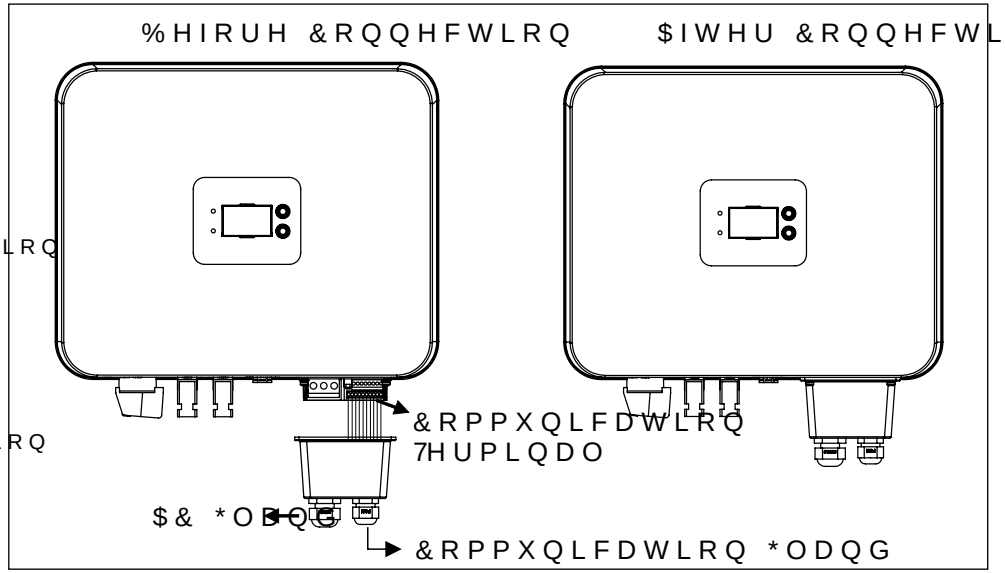

)LJ

6WHS LJKWHQ JODQG DQG WHUPLQDO FRYHU