FL-SC-DI04-RO04-CE-RoHS

Flexys IO Card

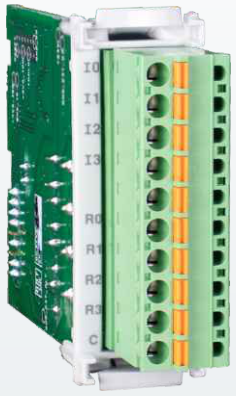

Features :

- **Plug in module**
- **Easy to connect & replace in Flexys GT35, Flexys rail, Flexys Panel TX4 & EXP FLEX 2M**
- **Configured via selpro software**
- **Spring type pluggable terminals**

Specifications

Digital inputs	
No. of digital inputs	4
Input type	DC, PNP
Operating range	6-30 V DC(+)
Input current	8mA max. per input
Response time	10ms (Selectable through software via debounce parameter
Input impedance	≥3.3 kΩ
Maximum counting frequency	40Hz (with<6ms debounce time)
Isolation	2.5kV (between CPU & inputs)
Reverse polarity protection	Yes
Relay output	
No. of relay output	4
Output type	NO contact type
Output current	5A @ 230VAC, 5A @ 30VDC
Response time	20ms (Selectable through software via debounce parameter
Isolation	2.5kV (between CPU & outputs)

General specifications

Ambient operating temperature	0°C to 55°C
Humidity	95%
Ambient storage temperature	-20°C to 70°C
Weight	50 gms

Terminal diagram

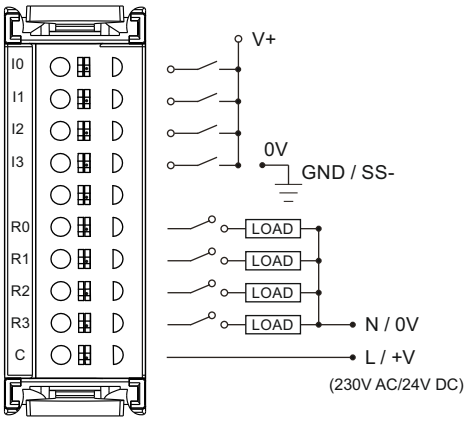

Ordering information

Product code	Description	Certification
FL-SC-DI04-RO04 -CE-RoHS	4 Digital inputs, 4 Relay outputs card	CE RoHS

FL-SC-DI10-CE-RoHS

Flexys IO Card

Features :

- **Plug in module**
- **Easy to connect & replace in Flexys GT35, Flexys rail, Flexys Panel TX4 & EXP FLEX 2M**
- **Configured via selpro software**
- **Spring type pluggable terminals**

Specifications

No of inputs per card	10 Nos
Input type	PNP
Input voltage range (v+)	7-30 V DC
Input current	5.5 mA @ 24 VDC, 7.5 mA @ 30 VDC
Maximum counting frequency	40Hz (with <6ms debounce time)
Response time	10ms (Selectable through software via debounce parameter)
Isolation between 230V Power supply and input	Yes
Protection against polarity inversion	Yes

General specifications

Ambient operating temperature	0°C to 55°C
Humidity	95%
Ambient storage temperature	-20°C to 70°C
Weight	43.7gms

Terminal diagram

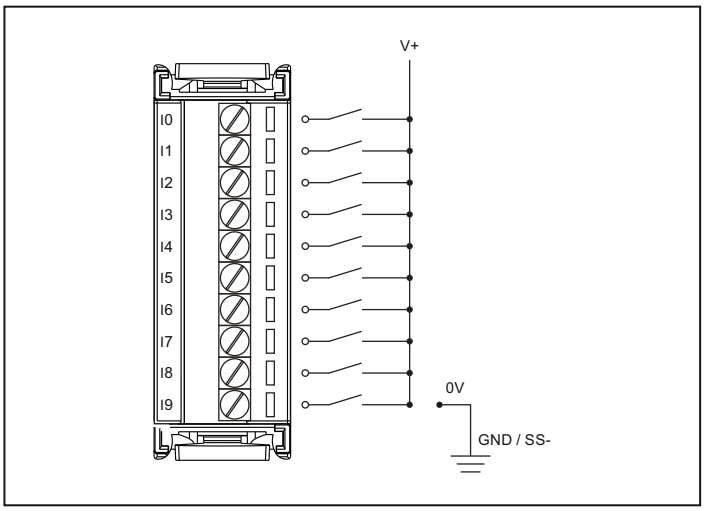

Ordering information

Product code	Description	Certification
FL-SC-DI10-CE-RoHS	10 Digital inputs card	CE RoHS

FL-SC-DI14-CE-RoHS

Flexys IO Card

Features :

- **Plug in module**
- **Easy to connect & replace in Flexys GT35, Flexys rail, Flexys Panel TX4 & EXP FLEX 2M**
- **Configured via selpro software**
- **Spring type pluggable terminals**

Specifications

No. of inputs	14 Nos
Input type	DC, PNP
Input voltage range (v+)	6 - 30V DC
Input current	8mA max per input
Action level	ON → OFF : > 2V DC ON → OFF : ≥ 6V DC
Input Impedance	≥3.3 kΩ
Debounce time	0 - 255ms (Default = 10ms)
Maximum counting frequency	40Hz (with <6ms debounce time)
Response time	10ms (selectable through software via debounce parameter)
Isolation	2.5kV (between CPU and inputs)
Protection against polarity inversion	Yes
Existence of common points between channels	For 230V supply : SS- For 24V supply : GND / 0V
Effect of incorrect input terminal	Unstable responses OR input / Product damage
Monitor point & binary state of visual indicator	Available

General specifications

Ambient operating temperature	0°C to 55°C
Humidity	95%
Ambient storage temperature	-20°C to 70°C
Connector	Spring type pluggable terminal block (3.5mm pitch)
Weight	40gms

Terminal diagram

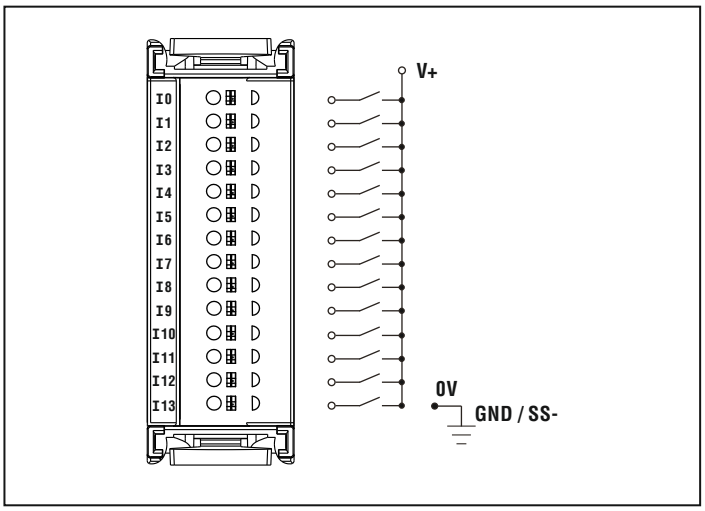

Ordering information

Product code	Description	Certification
FL-SC-DI14-CE-RoHS	14 Digital Inputs Card	CE RoHS