Solid State Relay

Panel Mount - DC Input & AC Output Single Phase

selec®
Creating Best Value

RSS SERIES

- Output current of 90 and 125 Amps
- Output voltage of 48-480 and 48-660VAC
- Control voltage of 4-32VDC
- Integrated IP20 touch safe removable cover
- Input status indicator - LED
- Cost-effective solution

Product selection-Zero crossing

Product name	RSS-SD1A290ZPL	RSS-SD1A2125ZPL	RSS-SD1A390ZPL	RSS-SD1A3125ZPL
Rated load current	90A	125A	90A	125A
Output voltage	48-480VAC	48-480VAC	48-660VAC	48-660VAC
Control voltage	4-32VDC	4-32VDC	4-32VDC	4-32VDC
Transient voltage	1600	1600	1600	1600

NOMENCLATURE

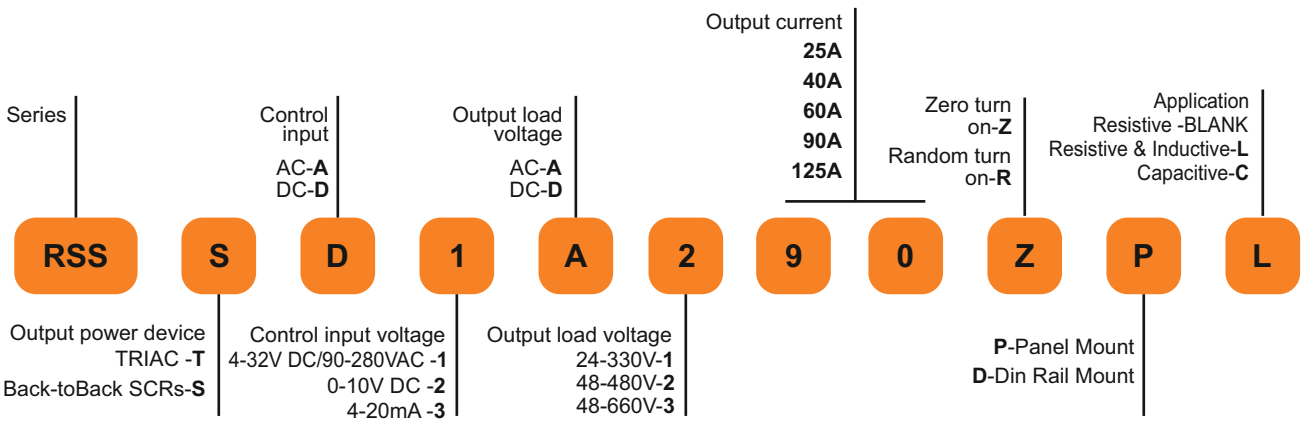

1 : Input Specification

Description	
Control voltage range	4-32 VDC
Control current range	4-15mA
Nominal input impedance	2k ohm
Pick up voltage	3 VDC
Drop out voltage	1 VDC
Maximum response time pick up	½ cycle + 1 msec
Maximum response time drop up	½ cycle + 1 msec
Max reverse voltage	40VDC
Zero crossing turn on	Available
Reverse voltage Protection	Available
LED indicator showing relay ON state	Available

2 : Output Specification

Description	RSS-SD1A290ZPL	RSS-SD1A2125ZPL	RSS-SD1A390ZPL	RSS-SD1A3125ZPL
Maximum Load current (Arms)	90	125	90	125
Minimum Load Current [mArms]	200	200	200	200
Min/Max Operating Voltage (Vrms)	48-480VAC	48-480VAC	48-660VAC	48-660VAC
Transient voltage (Vpk)	1600	1600	1600	1600
Maximum off state leakage current @ Rated voltage (mArms)	20	20	20	20
On state voltage drop @ Rated current (Vrms)	1.6	1.6	1.6	1.6
Minimum off state dv/dt @ maximum rated voltage (V/usec)	1000	1000	1000	1000
Maximum 1 cycle surge current Typ @ 50Hz (Arms)	1500	2000	1500	2000
Thermal Resistance Junction to Case (Rjc) [°C/W]	0.6	0.45	0.6	0.45
Maximum 1/2 Cycle $I^2 t$ for Fusing @ 50 Hz (min. / typical) [A^2sec]	11250	20000	11250	20000
Minimum Heat Sink for Rated Current @ 40°C [°C/W]	0.1	0.1	0.1	0.1

3 : General Specification

Description	RSS-SD1A290ZPL	RSS-SD1A2125ZPL	RSS-SD1A390ZPL	RSS-SD1A3125ZPL
Dielectric Strength, Input/Output to Ground	4000 Vrms			
Dielectric Strength, Input to Output	4000 Vrms			
Minimum Insulation Resistance	100 MΩ (at 500 VDC)			
Maximum Capacitance, Input/Output	0.8pF			
Ambient Temperature	Operating: -30°C to 80°C Storage: -30°C to 100°C			
Ambient Humidity	93% non-condensing			

4 : Housing Specification

Dimensions (Lx Wx H) (mm)	58.50 x 46.75 x 41
Weight	145 g
Baseplate	Aluminum
Material	Glass filled polyester
Mounting Type	Panel mount
LED input Status Indicator	Red

5 : Circuit Block Diagram

RSS Series

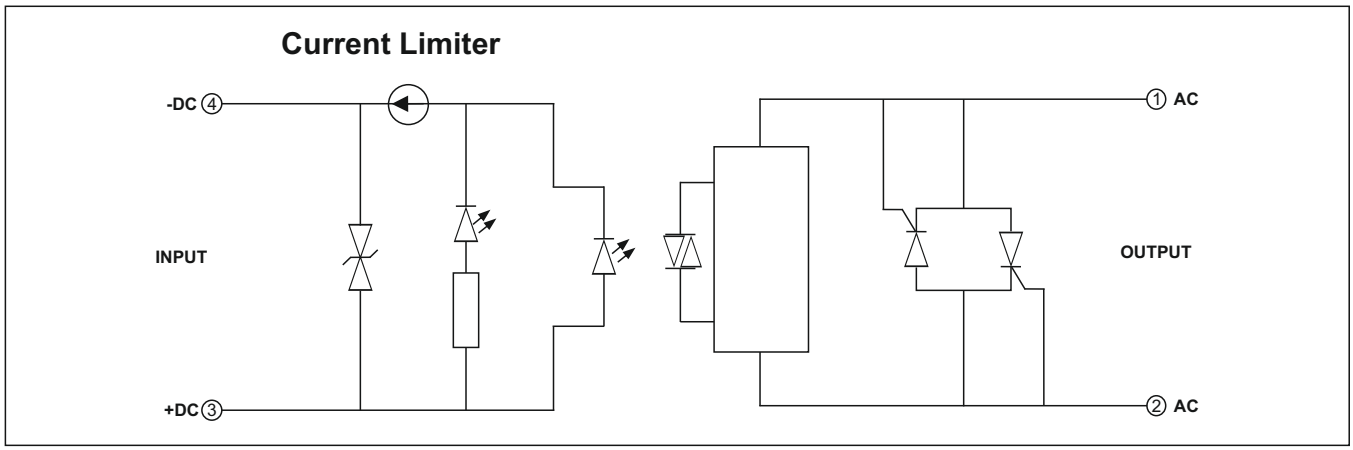

6 : Non Repetitive Surge Current

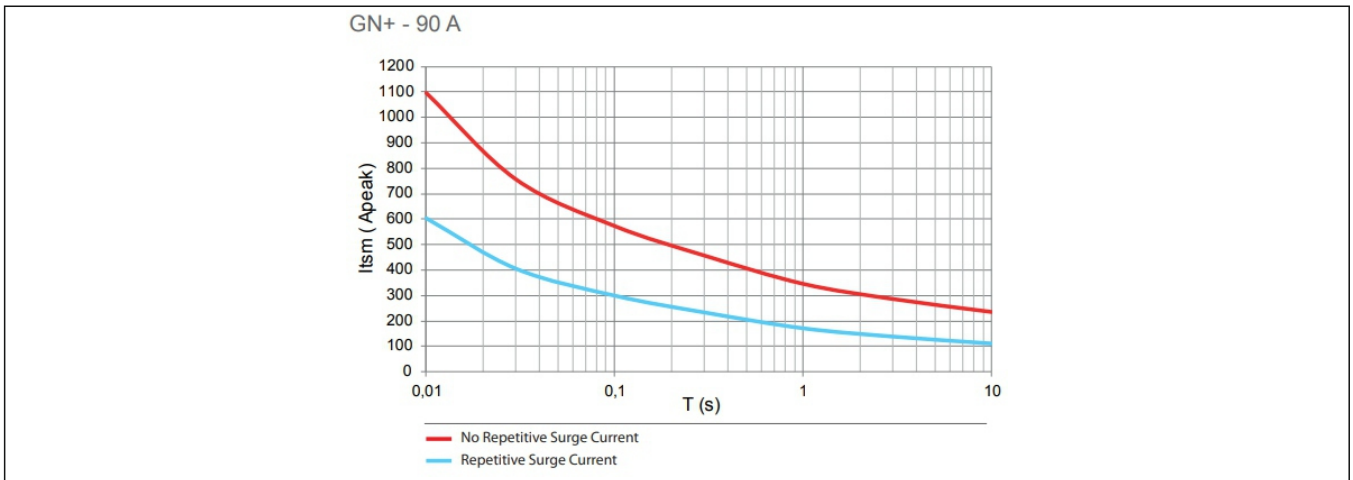

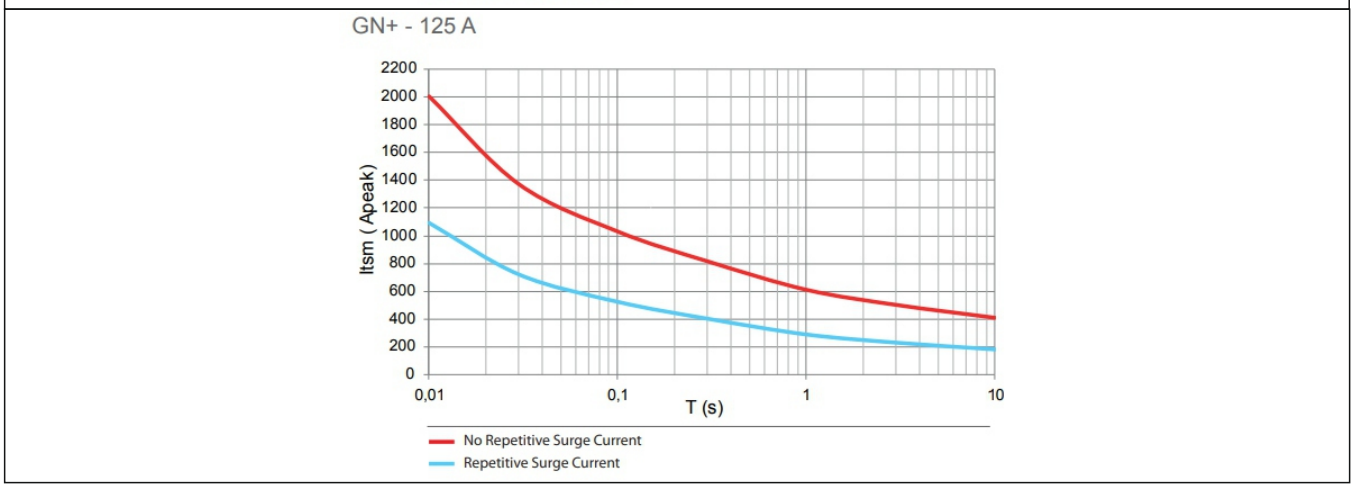

7 : Thermal Derating Curves

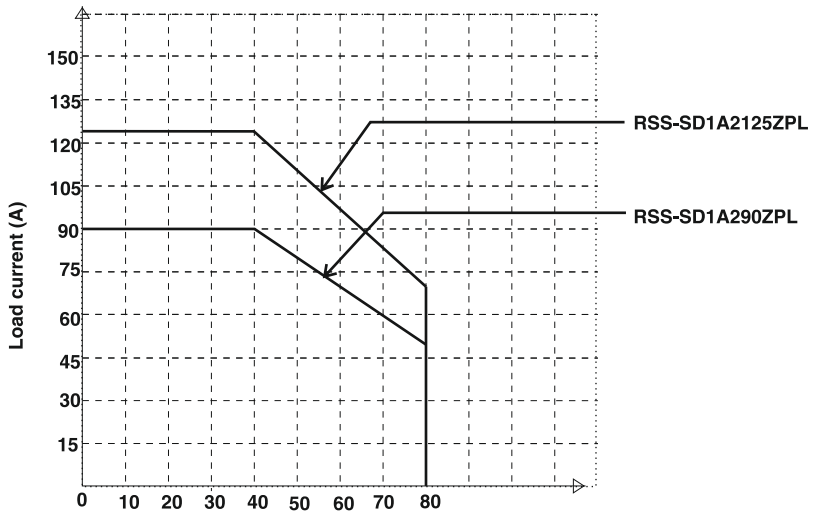

Note.: Heat sink used with a radiation efficiency of 0.1℃/W

8 : Wiring

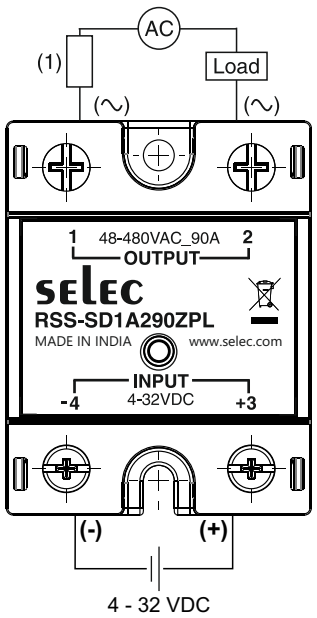

9 : Dimension (mm)

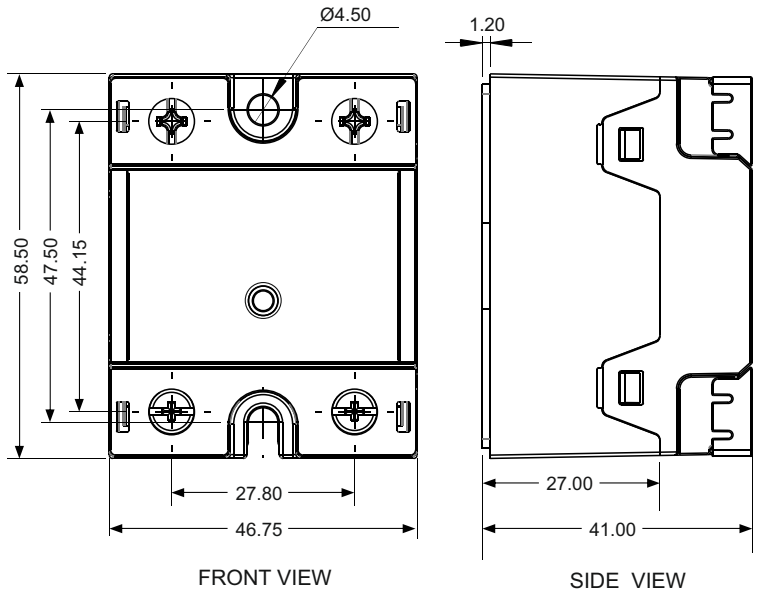

10 : Tightening Torque

Screw Size	Wire Size (Solid)	Tightening Torque
M4 Screws (control input)	18..14 AWG (0.75..2.5 mm²) 2 x 18..14 AWG (0.75..2.5 mm²)	1.2 N-m
M6 Screws (load output)	16..8 AWG (1.5..10 mm²) 2 x 16..8 AWG (1.5..10 mm²)	2.5 N-m