Features :

- **Dual Display, 4 digits, 7 segment LED**
- **LED Indication: Relay1, Relay2, Seconds, Minutes, Hours**
- **2 Set points**
- **Programmable input scaling**
- **Down counting for timer, Up/ Down counting for counter**
- **Batch counting**

48 x 48 mm

Certifications: CE c UL us

Technical specifications

Display	4 digits, 7 segment LED
LED indication	Relay1, Relay2, Seconds, Minutes, Hours
Sensor type	NPN / PNP
Input type	Voltage pulse (3 to 30 VDC) from Proximity switches, Solid state devices, Potential free contact encoder
Input speed	a) 3Hz b) 30Hz c) 5kHz
Accuracy	Timer: ± 0.05% of setting or 50 ms whichever is greater Counter: ± 2 counts
Sensor supply	Inbuilt, 12 VDC, 30mA (short circuit protected)
Relay contact	2 C/O SPST
Contact rating	5A @ 230 VAC
Modes	Timer: ON delay, Interval, Cyclic ON first, Cyclic OFF first, Batch Counter: ON delay, Interval, Auto reset,Time pulse repeat, Batch
Ranges	Timer: 0 - 99.99/ 0 - 999.9/ 0 - 9999sec 0 - 99.59min: sec, 0 - 999.9/ 0 -9999min 0 - 99.59hr: min, 0 - 999.9/ 0 - 9999hr Counter: - 999 to 9999 counts
Resolution	0.01sec
Counting direction	Timer: Down; Counter: Up/ down
Set point	2
Scale factor	0.001 to 9.999 x 10n
Reset	Front, Remote, Power interruption
Memory retention	Yes
Configuration lock	Password protected
Supply voltage	90 to 270 VAC/ DC (50/ 60Hz) -15% to 10% tolerance
Power consumption	5VA Max.

Temperature	Operating : 0 to 50°C (32 to 122°F) Storage : - 20 to 75°C (- 4 to 167°F)
Humidity (non - condensing)	95% RH

Mounting	Panel mount
Weight	170gms

Terminal connections

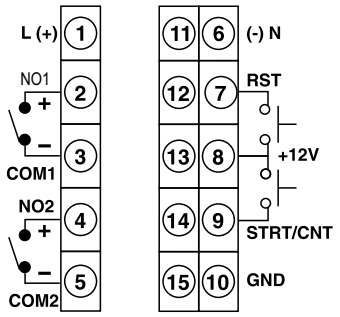

Dimensions

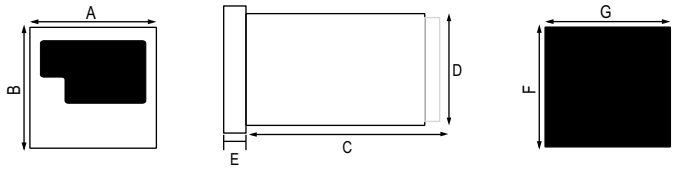

DIM	A	B	C	D	E	F	G
XTC5400	48	48	100	45	10	46	46

Compliance

Category	Reference Standards	Testing Level
Electrostatic Discharge	IEC 61000-4-2	Level-3
Electrical Fast Transient / Brust	IEC 61000-4-4	Level-3
Electromagnetic Field	IEC 61000-4-3	Level-3
Surge	IEC 61000-4-5	Level-3
Conducted RF	IEC 61000-4-6	Level-2
Rated Power Frequency	IEC 61000-4-8	Level-4
Voltage Dip / Short Interruptions	IEC 61000-4-11	Level-3
Conducted Emissions	CISPR-11	Class-B
Rated Emissions	CISPR-22	Class-A
Emission & Immunity	IEC 61326-1	
Safety	IEC 61010-1	
PFMF (Passing criteria)	IEC 61000-4-8	Class A

Ordering information

XTC5400	90 to 270 VAC/ DC	E253771
XTC5400-CU	90 to 270 VAC/ DC	E253771