8. LEVEL 5 - COMMUNICATION PARAMETERS (OPTIONAL)

Display	Name & Description	Range	Display condition	Default value
[redacted]	Baud Rate	300/600/1200 2400/4800 9600	——	9600
[redacted]	Communication station No.	1 to 99	——	1
[redacted]	Parity	NONE/EVEN Odd/MARK SPCE	——	NONE
[redacted]	Stop bit	1/2	——	1

CONNECTION DIAGRAM

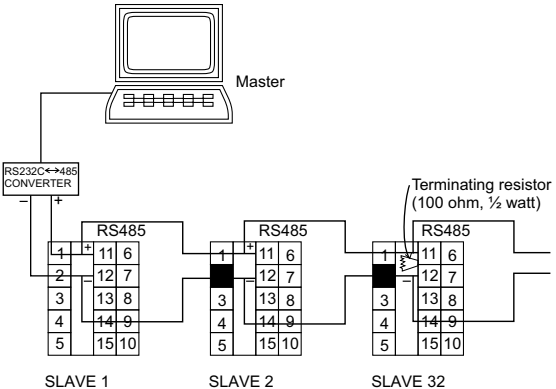

Note:
1. Maximum 32 slave controllers can be connected to the master.
2. The total cable length should not exceed 500 meters.
3. Use shielded twisted -pair cables for RS485 connections.
4. Use terminators having a resistance of 100ohm (½ watt).

[redacted]

8. LEVEL 6 - PROGRAMMABLE PARAMETER LOCKOUT MODULE

Display	Name & Description	Range	Display condition	Default value
[redacted]	User ID	0000 to 9999	___	0000
[redacted]	Program access settings #	ONL/LEUL	___	LEUL

 # If LOCK selection is ONL, the following parameters will be prompted.

Display	Name & Description	Range	Display condition	Default value
[redacted]	Lock Set 1	UNLY/READ /LOCY	___	UNLY
[redacted]	Lock Set 2	UNLY/READ /LOCY	___	UNLY
[redacted]	Lock Set 3	UNLY/READ /LOCY	___	UNLY
[redacted]	Lock tune parameter	UNLY/READ /LOCY	___	UNLY
[redacted]	Lock Hand parameter	UNLY/READ /LOCY	___	UNLY
[redacted]	Lock proportional band	UNLY/READ /LOCY	___	UNLY
[redacted]	Lock integral time	UNLY/READ /LOCY	___	UNLY
[redacted]	Lock derivative time	UNLY/READ /LOCY	___	UNLY
[redacted]	Lock Manual reset parameter	UNLY/READ /LOCY	___	UNLY
[redacted]	Lock proportional band-cool	UNLY/READ /LOCY	___	UNLY

 # If LOCK selection is LEVL, the following parameters will be prompted.

Display	Name & Description	Range	Display condition	Default value
[redacted]	Lock Level 0	UNLK/READ/LOCK	___	UNLK
[redacted]	Lock Level 1	UNLK/READ/LOCK	___	UNLK
[redacted]	Lock Level 2	UNLK/READ/LOCK	___	UNLK
[redacted]	Lock Level 3	UNLK/READ/LOCK	___	UNLK
[redacted]	Lock Level 4	UNLK/READ/LOCK	___	UNLK

[redacted]	Change password	Id-N/Id-Y	___	Id-N
[redacted]	New password	___	NEW = Id-Y	0

NOTE:
UNLK - Full access to the particular level / parameter.
READ - Particular level / parameter can be read but not edited.
LOCK - No access to the particular level / parameter.

Insert jumper to reset the lock - id.

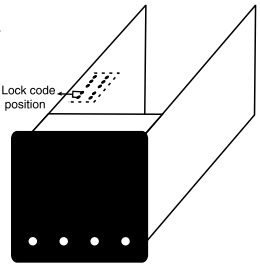

ONLINE DISPLAY OPTION

This function allows user to view online display options.
NOTE:
The parameters shown below are not prompted if they are locked in level 6.

DISPLAY	DESCRIPTION	DISPLAY CONDITION
[redacted]	**Set point 1**	——
[redacted]	**Set point 2**	Online access for Set 2 not valid if Auxillary output = Sensor Break / OFF / Retransmission
[redacted]	**Set point 3**	Online access for Set 3 not valid if Alarm mode = Sensor Break / OFF.
[redacted]	**Auto tune**	Online access for Auto tune is not valid if PB-Heat=0 and HC =no or PB-Cool=0.
[redacted]	**Hand output percentage**	This parameter is not prompted if Pb- H = 0
[redacted]	**Proportional band - heat**	——
[redacted]	**Integral time**	Integral time is not prompted if PB = 0
[redacted]	**Derivative time**	Derivative time is not prompted if PB = 0
[redacted]	**Manual reset**	Manual reset is prompted only if Integral-main=0 and PB-heat > 0.
[redacted]	**Proportional band - cool**	This parameter is prompted only if HC = yes.
[redacted]	**Ramp set point**	This parameter is prompted only if Ramp is ON / Hold. This parameter is read only and cannot be altered.

DISPLAY	DESCRIPTION	DISPLAY CONDITION
[redacted]	**Output percentage**	This parameter is read only and cannot be altered.
[redacted]	**Elapsed soak time**	Note: This parameter is prompted only if Ramp is ON / Hold. This parameter is read only and cannot be altered.
[redacted] / [redacted]	**Temperature unit**	Note: This parameter is not prompted for 0-10 V / 4-20mA. This parameter is read only and cannot be altered.
[redacted]	**Alarm acknowledge 1**	Note: This parameter is prompted only if Alarm1 is ON and Latch is ON.
[redacted]	**Alarm acknowledge 2**	Note: This parameter is prompted only if Alarm2 is ON and Latch is ON.
[redacted]	**Blank**	——

USER GUIDE

- **AUTO TUNING:**

Auto tuning is a function whereby the controller learns the process characteristics by itself and automatically sets the required P,I and D values. The auto-tuning function can be activated at any time during the process after power ON , while temperature is rising or when control has stabilized. Autotune is indicated by T LED blinking. After the auto tuning procedures are completed, the T LED will stop flashing and the unit will revert to PID control by using its new PID values. The PID values obtained are stored in the nonvolatile memory.

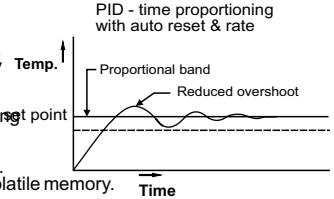

The auto-tuning is applied in cases of:

- Initial setup for a new process
- The set point is changed substanitally from the previous auto-tuning value.
- The control result in unsatisfactory.

The following controller parameters are automatically adjusted by Auto- tune according to the characteristics of the process:

Proportional Band (Pb-1)
Integral Time (It-1)
Derivative Time (dt-1)
Input Filter (FtC)

If the control performance by using auto-tuning is still unsatisfactory, the following rules can be applied for further adjustment of PID values:

ADJUST MENT SEQUENCE	SYMPTOM	SOLUTION
(1) Proportional Band (PB)	Slow Response	Decrease PB
	High overshoot or Oscillations	Increase PB
(2) Integral Time (IT)	Slow Response	Decrease IT
	Instability or Oscillations	Increase IT
(3) Derivative Time (TD)	Slow Response or Oscillations	Decrease TD
	High Overshoot	Increase TD

- **PROPORTIONAL BAND:**

Proportional band is the area around the set point where the controller is actually controlling the process; the output is at some level other than 100% or 0%.

Proportional band is expressed in terms of degree centigrade.

If the proportional band is too narrow an oscillation around the setpoint will result. If the proportional band is too wide the control will respond in a sluggish manner, could take a long time to settle at set point and may not respond adequately to upsets.

- **MANUAL RESET:**

Virtually no process requires precisely 50% output on single output controls or 0% output on two output controls. The adjustment called manual reset allows the user to redefine the output requirement at the setpoint. A proportioning control without manual or automatic reset will settle out somewhere within the proportioning band but likely not on the setpoint.

- **INTEGRAL TIME:**

Integral time is defined as the time, in seconds, which corrects for any offset (between setpoint and process variable) automatically over time by shifting the proportioning band. Integral action (also known as “automatic reset”) changes the output power to bring the process to setpoint. Integral times that are too fast (small times) do not allow the process to respond to the new output value. This causes over-compensation and leads to an unstable process with excessive overshoot. Integral times that are too slow (large times) cause a slow response to steady state errors. Integral action may be disabled by setting the time to zero. If time is set to zero, the previous integral output power value is maintained. If integral action is disabled, manual reset is available by modifying the output power offset (“MNL.r” initially set to zero) to eliminate steady state errors. The controller has the feature to prevent integral action when operating outside the proportional band. This feature is called **“antireset wind-up”**.

- **DERIVATIVE TIME**

Derivative action is used to shorten the process response time and helps to stabilize the process by providing an output based on the rate of change of the process. In effect, derivative action anticipates where the process is headed and changes the output before it actually “arrives”. The derivative time is calculated in seconds. Increasing the derivative time helps to stabilize the response, but too much derivative time coupled with noisy signal processes, may cause the output to fluctuate too greatly, yielding poor control. None or too little derivative action usually results in decreased stability with higher overshoots. No derivative action usually requires a wider proportional and slower integral times to maintain the same degree of stability as with derivative action. Derivative action is disabled by setting the time to zero.

- **DERIVATIVE APPROACH CONTROL:**

Derivative approach control (DAC) helps in reducing overshoot at startup. The control output cutoff point is derived as DAC x Proportional band. Note that the DAC value is automatically calculated and fed after autotuning (if tuning is initiated at startup).

- **AUTO-TUNE OF HEAT/COOL SYSTEMS:**

During Autotune of heat/cool systems, the controller switches the cooling output (O2) ON and OFF in addition to the heat output (O1). The heat/cool overlap deadband parameter (db in Level 2) determines the amount of overlap or deadband between the two outputs during Autotune.
For most applications, set this parameter to 0.0 prior to starting Autotune. After the completion of Autotune, this parameter may need to be reset. It is important that external load disturbances be minimized, and if present, other zone controllers idled as these may have an effect on the PID constant determination.
Some water cooled processes exhibit an extreme non-linear gain characteristic. That is, the process cooling gain starts very high and flattens out deeper into the cooling region. This effect may result in regular oscillations at setpoint as the controller applies heat to counteract the effect. These processes may benefit from a lower cooling fan setting and/or reduced water flow in the jacket or manifold. The process heat and cool gains should be balanced as much as possible, and the controller gains adjusted to the process.

- **ANALOG OUTPUT-RETRANSMISSION:**

1. The analog retransmission output feature allows the retransmission of the control output to an external device.
2. The output is scaled by use of Analog low and high scaling points in level 2 of the programming menu. The analog output will be proportional to PV (derived from Analog Low and High scaling.)
3. A-LO : Displays the value that corresponds to 0V, 0/4mA as selected.
   A-HI : Displays the value that corresponds to 10V or 20mA as selected.
4. Note that the main output selection in level 4 has to be relay 2.

- **ALARM MODES:**

1. Absolute alarms (Independent Alarm) :
Absolute alarm is a self-existent alarm independent of the main set point.For eg. If the main set point is 100°C and absolute alarm is set as 110°C, the alarm will be activated at 110°C.
There are two absolute alarms-
Full scale High Alarm: sets off alarm signal when temperature rises above set point to a pre-set temperature above scale minimum. **Refer Fig: d.**
Full scale Low Alarm: sets off alarm signal when temperature falls below setpoint to a pre-set temperature above scale minimum. **Refer Fig: e.**

2. Deviation alarms (Error alarm):
This alarm is activated at an error on the main set point. For eg. If the main set point is 100°C and deviation alarm is set to +5 °C then the alarm will be activated at 100+5=105 °C. Incase of deviation band alarm the alarm will be activated on both sides of set point i.e. At 95 and 105.
There are three deviation alarms -
Deviation High Alarm: sets off alarm signal when temperature rises above a pre-set temperature above the set point. **Refer Fig: a.**
Deviation Low Alarm: sets off alarm signal when temperature falls below a pre-set temperature below the set point. **Refer Fig: b.**
Deviation Band Alarm: sets off alarm signal when temperature rises above or falls below a pre-set temperature above or below the set point. **Refer Fig: c.**

3. BREAK ALARM:
Break Alarm: sets off alarm signal when sensor break / under range occurs.

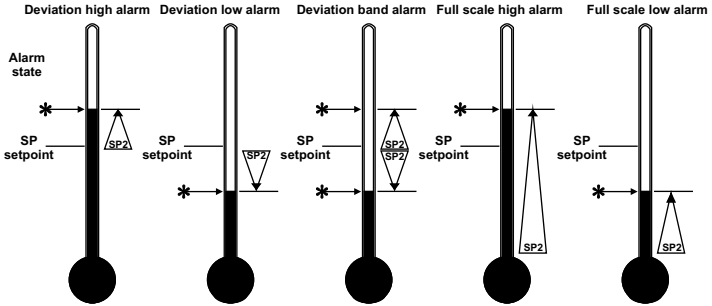

Fig: a. Fig: b. Fig: c. Fig: d. Fig: e.

- **Zone PID:**

There are 4 control Zones each having a set point and associated P, I and D values which can be programmed as per the process requirements. A control Zone is selected automatically and implemented as per the set value programmed, to accommodate changing process requirements. The corresponding P, I,D values will be used to control the process. The main advantage of Zone PID is in processes where there is a requirement of frequent tuning, due to change in setpoint. Consider a case where the process needs to be controlled at two different set points: 100°C and 400°C.
The Zone set points may be programmed as:

1. Zone setpoint 1 (Level1) : 150°C (This implies that for 0 < set1 < 150, Zone1 PID values will be considered.)
2. Zone setpoint 2 (Level1) : 450°C (This implies that for 150 < set1 < 450, Zone2 PID values will be considered.)

The P, I, D values for the respective Zones can be manually fed or can be tuned automatically.

How to tune the Zones

NOTE : Zone setpoint is not the tuning setpoint.

To tune, say, Zone 1 program the following:

1. Set1 (Online) = 100°C (for eg.) (Zone 1 : 0 - 150°C)
   Note:
   - Set1 < Zone setpoint 1.
   - The PID settings derived after tuning are stored in Zone 1.
   - After tuning, for 0 < Set1 < 150°C, PID settings of Zone 1 are applicable.

2. Program Tune = ON (in Level 1 or Online)

3. After tuning the controller is automatically loaded with the new PID values.

Now to tune the next Zone, Zone 2, program the following:

1. Set 1 (Online) = 400°C (Zone 2 :150 - 450°C)
   Note:
   - Zone Setpoint 1 < Set 1 < Zone setpoint 2.
   - The PID settings derived after tuning are stored in Zone 2.
   - After tuning, for 150 < Set1 < 450°C, PID settings of Zone 2 are applicable.

Similarly, the four different Zones can be programmed.

Configuration Record Sheet

selec

Enter the value or selection for each prompt on this sheet so you will have a record of how your controller was configured.

Levels	Function Prompt	Value or Selection	Factory Setting
Input Parametrs	[redacted]	_____	J
	PESL	_____	1
	tEmP	_____	°C
	dSC.L	_____	0
	1SC.L	_____	As per input type selected.
	dSC.H	_____	9999
	1SC.H	_____	As per input type selected.
	PSCL	_____	no
	[redacted]	_____	750
	[redacted]	_____	-200
Output Parametrs	SEt	_____	ALL
	[redacted]	_____	OFF
	tUNE	_____	P.AU
	[redacted]	_____	PE
	P-LO	_____	0
	P-H1	_____	100
	[redacted]	_____	10
	HYSt	_____	1.0
	HYS.b	_____	0.0
	tmP	_____	0.0
	It-1	_____	120
	[redacted]	_____	30

Levels	Function Prompt	Value or Selection	Factory Setting
Output Parametrs	dAC	_____	1.0
	CYC.t	_____	USER
	CYC.U	_____	15.0
	AMY	_____	AUtO
	AMY.P	_____	100.0
	AMLM	_____	0
Zone Settings	2-M0	_____	1
	[redacted]	_____	0
	[redacted]	_____	10
	It-1	_____	120
	dt-1	_____	30
	[redacted]	_____	0
	[redacted]	_____	10
	It-2	_____	120
	dt-2	_____	30
	[redacted]	_____	0
	[redacted]	_____	10
	It-3	_____	120
	dt-3	_____	30
	[redacted]	_____	0
	[redacted]	_____	10
	It-4	_____	120
	dt-4	_____	30

Levels	Function Prompt	Value or Selection	Factory Setting
Auxiliary Output Modes	[redacted]	_____	ALMn
	[redacted]	_____	dEU
	SEt2	_____	0
	Pb-C	_____	0.0
	CYC.t	_____	15.0
	HYSt	_____	1.0
	HYS.b	_____	0.0
	[redacted]	_____	dUHI
	LtCH	_____	OFF
	HOLd	_____	OFF
	ALMn	_____	En
	ANn	_____	OFF
	A-LO	_____	0
	A-HI	_____	1000
	S.Emr	_____	HIGH
Alarm 2 Module	[redacted]	_____	dUHI
	LtCH	_____	OFF
	HOLd	_____	OFF
	ALMn	_____	En
	ANn	_____	OFF
	SEt3	_____	0
	HYSt	_____	1.0
	HYS.b	_____	0.0

Levels	Function Prompt	Value or Selection	Factory Setting
Special Function	[redacted]	_____	NO
	[redacted]	_____	NO
	[redacted]	_____	PLY1/AOUt
	SSP	_____	OFF
	[redacted]	_____	OFF
	HAND	_____	OFF
	MAnP	_____	OFF
	RAtE	_____	100
	SOAK	_____	0
	OPEN	_____	AUtO
	FAIL	_____	0
	[redacted]	_____	0.0
	[redacted]	_____	1
	MOdG	_____	1.0
	[redacted]	_____	NO
	[redacted]	_____	NO
Communication	[redacted]	_____	9600
	[redacted]	_____	1
	[redacted]	_____	NONE
	[redacted]	_____	1

Calibration Certificate

selec

Model No: PID500-110-330

Claimed Accuracy: ± 0.25% of full scale ±1 digit (After 20min warmup time)

Standard used for calibration of the product is traceable to NABL

The calibration of this unit has been verified at the following values:

SENSOR	CALIBRATION TEMP (°C) (0.1 resolution)	DISPLAY VALUE (°C)	SENSOR	CALIBRATION VALUE (0.1 resolution)	DISPLAY VALUE
K	35.0	35.0	Voltage (VDC)	0.0	0.0
	700.0	700.0		10.0	10.0
	1350	1350			
PT100	0.0	0.0	Current (mA)	0.0	0.0
	500.0	500.0		20.0	20.0
	800.0	800.0			

The thermocouple / RTD curves are linearised in this microprocessor based product, and hence the values interpolated between the readings shown above are also equally accurate, at every point in the curve.

Unit is accepted as accuracy is withing the specified limit of claimed accuracy and certificate is valid upto one year from the date of issue.

Disclaimer : "This product is strictly for industrial use and for sale in non European countries only"