TO PROGRAM SET TIME :

FOR ON DELAY / INTERVAL MODE :
Press ◘ + ♫ / ♥ to program set time.

For Cyclic mode :
ON time - Press ◘ + ♫ / ♥ to program on time

OFF time - To enter programming of off time press ♫ + ♥ for 3sec. When in Off time programming, the LSD dp blinks Then press ◘ + ♫ / ♥ to set off time.

To Exit programming press ♫ + ♥ for 3sec or auto program out after 60sec if no key is pressed.

TO RESET :

For On delay / Interval mode : Press ♫ + ♥ for 0.6sec to reset.

For Cyclic mode : Front reset not valid. Reset only through pulse given From rear terminals.

USER GUIDE

Typical applications of Pulse start & Gate start input:

1. ON Delay with Pulse start input:

i. Terminal connections shall be as per fig. 1
ii. Timing starts on momentary closure of Start switch.
iii. If Start switch is kept closed continuously, the timing will start at every power ON or reset.

XT543-N in ON Delay mode and Pulse start input:
Fig.1 Terminal Connections

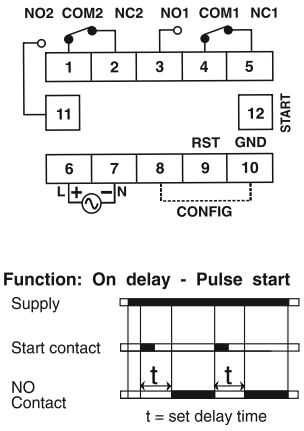

2. ON Delay with Gate start Input:

i. Terminal connections shall be as per fig. 2.
ii. Timing starts at power ON.
iii. When the start switch is closed, the timing is held and it proceeds only after the start switch is released.

XT543-N in ON Delay mode and Gate start input:
Fig.2 Terminal Connections

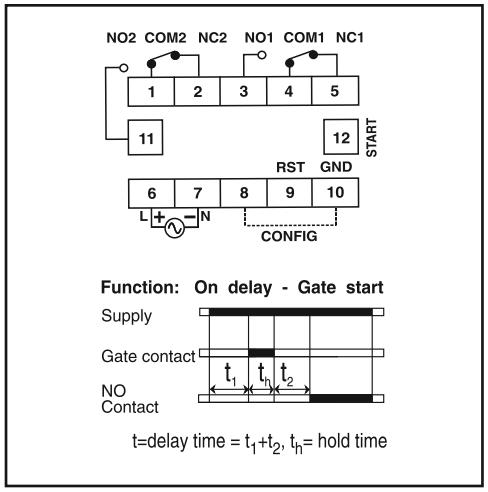

OPERATING MODES

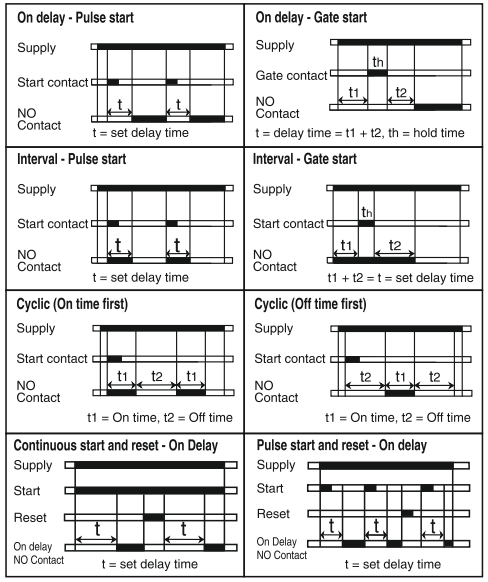

(Specifications are subject to change, since development is a continuous process.)

Selec Controls Pvt. Ltd.

Factory Address : EL-27/1, Electronic Zone, TTC Industrial Area, MIDC, Mahape, Navi Mumbai - 400 710, India.
Website : www.selec.com
For Sales & Support,
Tel. No. : +91-22-41418468 / 452
Mob. No. : +91-9136977315, **Email :** sales@selec.com
For Service,
Tel. No. : +91-7498077172 / +91-7400069545
Email : service@selec.com