Features :

- Use with different bus bar
- Panel mount / Din rail mount (Optional accessory)
- Accuracy : Class 0.5 to 5

Cetification : CE c UL us LISTED

Input / Output specifications

Rated primary rating	60A to 1200A
Rated secondary output	5A

Technical specifications

Rated burden	1VA to 15VA
Class of accuracy	0.5 to 5
Thermal Nominal Continuous	120% of In Rated Current (Icth)
Thermal short circuit current (Ith)	Ith = 60 X In for 1 sec
Instrument security factor	FS <5
Isolation class	E (120°C max)
Max operating voltage (Um)	720V maximum
Isolation test voltage	3kV AC 1 min
Nominal rated frequency	AC 50Hz - 60Hz

Environmental specifications

Ambient temperature	0°C…+50°C
Humidity	< 95% RH (non condensing)
Storage temperature	-5°C…+50°C

Mounting modes	Panel Mount / DIN rail Mount

Standard

Applicable standard	IEC 61869 - 2

Dimension (in mm)

SPCT-50 / 30

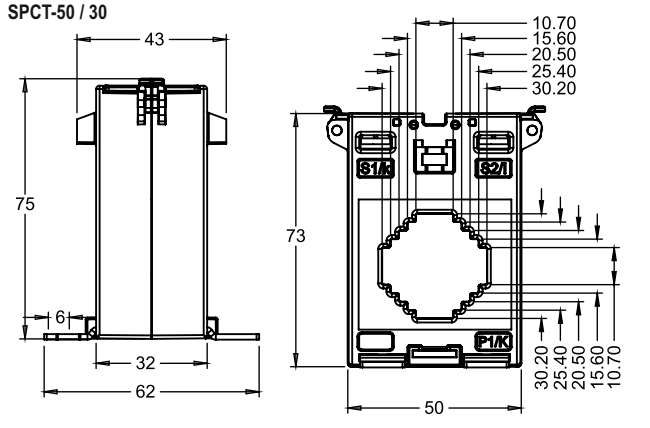

Dimension (in mm)

SPCT-62 / 22, 62 / 30, 62 / 40

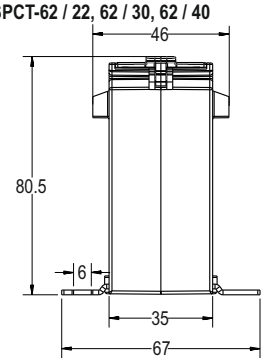

SPCT-62 / 22

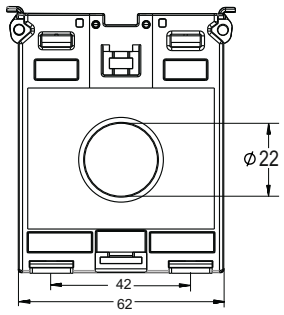

SPCT-62 / 30

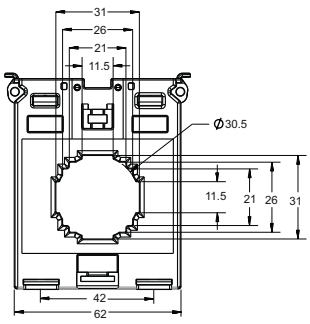

SPCT-62 / 40

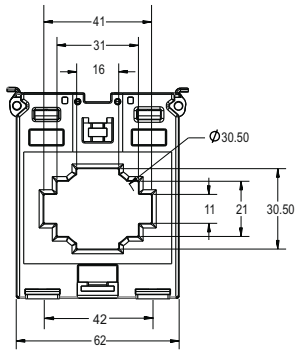

SPCT-100 / 60

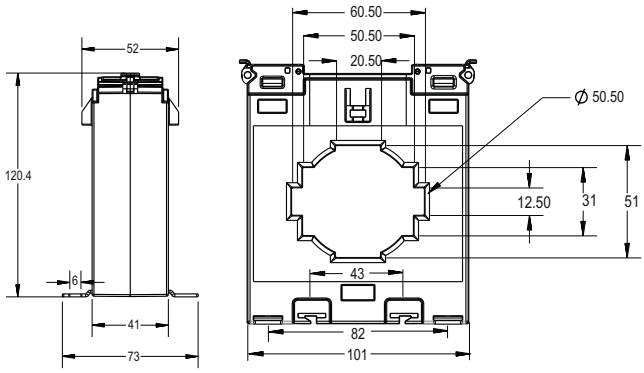

Accessories (DIN Rail Clamp)

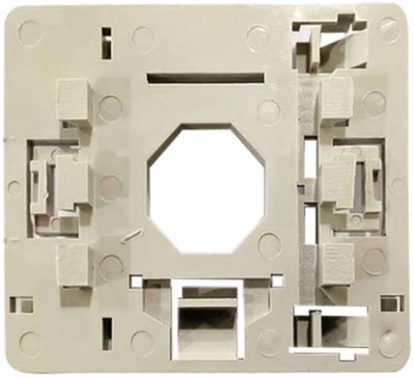

Ordering Information

PRODUCT CODE	WIRE APERTURE In mm	CURRENT RATIO	BURDEN IN VA	ACCURACY CLASS
SPCT-50/30-60/5A-VA1-CL5-CE	30x10	60 / 5	1	5
SPCT-50/30-75/5A-VA1-CL1-CE	30x10	75 / 5	1	1
SPCT-50/30-80/5A-VA1-CL1-CE	30x10	80 / 5	1	1
SPCT-50/30-100/5A-VA1-CL1-CE	30x10	100 / 5	1	1
SPCT-50/30-125/5A-VA1.25-CL1-CE	30x10	125 / 5	1.25	1
SPCT-50/30-160/5A-VA1.5-CL1-CE	30x10	160 / 5	1.5	1
SPCT-50/30-200/5A-VA3-CL1-CE	30x10	200 / 5	3	1
SPCT-50/30-250/5A-VA3-CL1-CE	30x10	250 / 5	3	1
SPCT-50/30-400/5A-VA5-CL1-CE	30x10	400 / 5	5	1
SPCT-62/22-30/5A-VA1-CL5-CE	DIA 22	30 / 5	1	5
SPCT-62/30-50/5A-VA1-CL3-CE	30x10	50 / 5	1	3
SPCT-62/30-50/5A-VA1.5-CL3-CE	30x10	50 / 5	1.5	3
SPCT-62/30-75/5A-VA1-CL3-CE	30x10	75 / 5	1	3
SPCT-62/30-75/5A-VA3-CL3-CE	30x10	75 / 5	3	3
SPCT-62/30-100/5A-VA1-CL1-CE	30x10	100 / 5	1	1
SPCT-62/30-100/5A-VA3-CL1-CE	30x10	100 / 5	3	1
SPCT-62/40-100/5A-VA1-CL1-CE	40x10	100 / 5	1	1
SPCT-62/40-125/5A-VA1-CL1-CE	40x10	125 / 5	1	1
SPCT-62/40-150/5A-VA1.5-CL1-CE	40x10	150 / 5	1.5	1
SPCT-62/40-150/5A-VA3-CL1-CE	40x10	150 / 5	3	1
SPCT-62/40-160/5A-VA1.5-CL1-CE	40x10	160 / 5	1.5	1
SPCT-62/40-200/5A-VA 2.5-CL0.5-CE	40x10	200 / 5	2.5	0.5
SPCT-62/40-200/5A-VA3-CL1-CE	40x10	200 / 5	3	1
SPCT-62/40-250/5A-VA 2.5-CL0.5-CE	40x10	250 / 5	2.5	0.5
SPCT-62/40-250/5A-VA3-CL1-CE	40x10	250 / 5	3	1

Ordering Information

PRODUCT CODE	WIRE APERTURE In mm	CURRENT RATIO	BURDEN IN VA	ACCURACY CLASS
SPCT-62/40-300/5A-VA3-CL0.5-CE	40x10	300 / 5	3	0.5
SPCT-62/40-400/5A-VA3.75-CL0.5-CE	40x10	400 / 5	3.75	0.5
SPCT-62/40-400/5A-VA5-CL1-CE	40x10	400 / 5	5	1
SPCT-100/60-500/5A-VA5-CL1-CE	60x12	500 / 5	5	1
SPCT-100/60-600/5A-VA5-CL0.5-CE	60x12	600 / 5	5	0.5
SPCT-100/60-600/5A-VA-7.5-CL1-CE	60x12	600 / 5	7.5	1
SPCT-100/60-800/5A-VA10 CL0.5-CE	60x12	800 / 5	10	0.5
SPCT-100/60-1000/5A-VA15-CL0.5-CE	60x12	1000 / 5	15	0.5
SPCT-100/60-1200/5A-VA15-CL0.5-CE	60x12	1200 / 5	15	0.5

Accessories

PRODUCT CODE	CERTIFICATION
AC-SPCT-DRAIL-01 (Pack of 10)	---