Mechanical Specifications

Dimensions

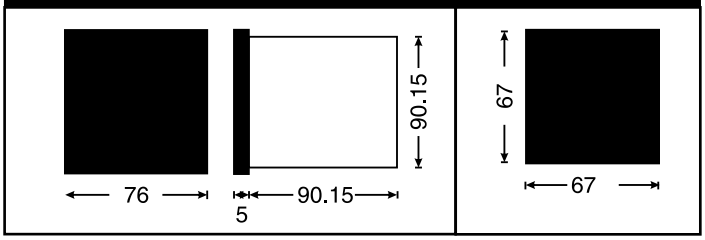

Terminal Connection

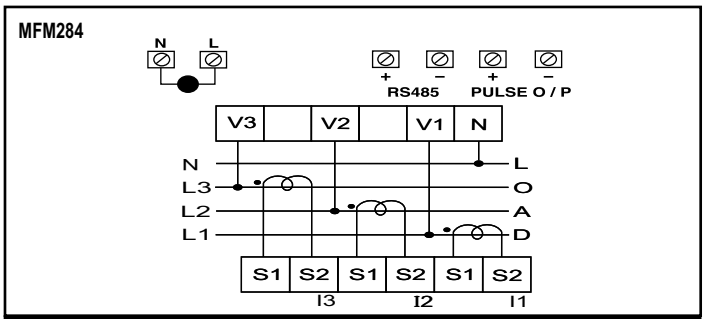

Compliance

Category		Standards Compliance
ESD Immunity	IEC 61000 - 4 - 2	Level IV (Air Discharge : 15kV), (Contact Discharge : -8kV)
Surge Immunity	IEC 61000 - 4 - 5	+ / - 2kV Common Mode, (Line to Ground) + / - 1kV Differential Mode, (Line to Line)
Radiated Susceptibility	IEC 61000 - 4 - 3	Level III, 80 to 1000MHz (10V / m) Level II, 1.4GHz to 2GHz (3V / m) Level I, 2GHz to 2.7GHz (1V / m)
Conducted Susceptibility	IEC 61000 - 4 - 6	Level II (3V / m)
Voltage Dips and Interruptions	IEC 61000 - 4 - 11	**Dips** : 0% residual voltage / 1 cycle (Criteria B), 40% residual voltage / 10 cycles 50Hz / 12 cycles 60Hz (Criteria C) 70% residual voltage / 25 cycles 50Hz / 30 cycles 60Hz (Criteria C) **Interruptions** : 0% residual voltage / 250 cycles 50Hz / 300 cycles 60Hz (Criteria C)
Conducted Emission	CISPR - 11	
Radiated Emission	CISPR - 11	
Electrical Fast Transient	IEC 61000 - 4 - 4	Level III (2kV)

Ordering Information

CE