Features :

- **4+4 digits, 7 segment LED dual display**
- **TC/ RTD input**
- **ON- OFF/ PID control**
- **Two set points**
- **°C/°F selectable**
- **Field selectable control output (Relay or SSR)**
- **Auxiliary output: Relay**

72 x 72mm **96 x 96mm**

Technical specifications

Display	4+ 4 digits, 7 Segment LED dual display
LED indication	OUT 1: ON T: Auto Tune OUT 2: ON S: Dwell timer
Inputs	Thermocouple (J, K, T, R, S) / RTD (PT100)
Resolution	0.1/ 1° for TC/ RTD inputs (fixed 1° for R & S type TC input)
Indication accuracy	For J, K & T inputs: 0.25% of F.S. ±1° For R & S inputs: 0.5% of F.S. ±2° (20 min of warm up time for TC inputs) For RTD input: 0.1% of F.S. ±1° (F.S. = Full scale)
Temperature unit	°C/°F selectable
Input filter (FTC)	0.2 to 10.0 sec
Sampling time	250 ms
Control output (Relay or SSR user selectable)	
Relay contact (SPDT)	Main Output: NO: 10A 250 VAC/ 24 VDC NO/ NC: 5A/ 5A 250 VAC/ 24 VDC
SSR drive (Voltage pulse)	12 VDC, 50 mA
Auxiliary output	
Relay contact (SPDT)	NO: 10A 250 VAC/ 24 VDC NO/ NC: 5A/ 5A 250 VAC/ 24 VDC
Control action	1) PID Control with auto tuning 2) ON-OFF control
Proportional band (P)	1.0 to 400.0°C
Integral time (I)	0 to 9999 sec
Derivative time (D)	0 to 9999 sec
Cycle time	0.1 to 99.9 sec
Hysteresis width	0.1 to 99.9°
Manual reset value	-19.9 to 19.9°
Heat-cool	
Control action	PID
Proportional band-cool	1.0 to 400.0°C
Cycle time-cool	0.1 to 99.9 sec
Dead band	SPLL to SPHL (Programmable)
Settings for alarm output	
Modes	Deviation, Absolute
Hysteresis	0.1 to 99.9°

Supply voltage	90 to 270 VAC/ DC (50/ 60Hz)
Power consumption	6 VA max @ 230 VAC
Temperature	Operating: 0°C to 50°C; Storage: - 20°C to 75°C
Humidity (non - condensing)	95% RH
Mounting	Panel
Weight	TC244AX - 200 gms ; TC344AX - 252 gms

Terminal connections

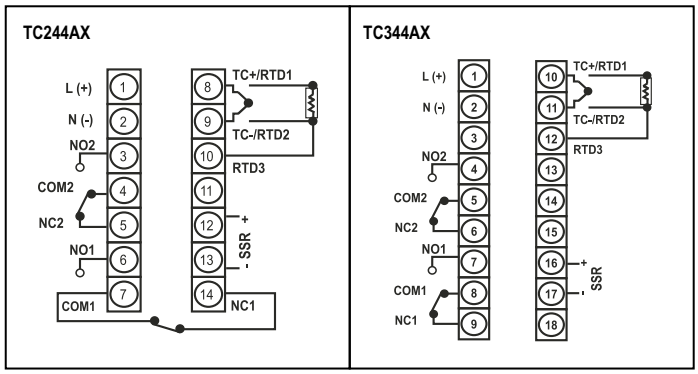

Dimensions (All are in mm)

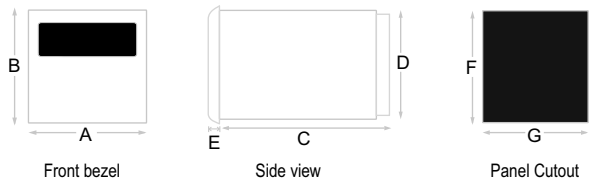

DIM	A	B	C	D	E	F	G
TC244AX	76	76	83.7	67	4.5	69	69
TC344AX	100	100	73	90.5	5	92	92

Ordering information

TC244AX	RELAY (5A)	SSR (12 VDC)	RELAY (5A)	90 to 270 VAC / DC	**- - -**
TC344AX	RELAY (5A)	SSR (12 VDC)	RELAY (5A)	90 to 270 VAC / DC	**- - -**