MRJ385 Multifunction Meter

96 x 96mm

Features :

- 3Ø True RMS (Voltage, Current)
- 3Ø Power (Active, Reactive, Apparent), Energy (Active, Reactive, Apparent)
- Plug-n-Wire, RJ45 connector current input
- Programmable CT Primary, PT Primary / Secondary
- Modbus RTU communication (RS485)
- Pulse output
- Max / Min demand of power
- % THD up to 31st level for Voltage and Current

Certification : CE

Display specifications

Display	LCD with Backlight, 4 rows
Digits	4 digits (Lowest 8 digits for energy display)
Digit height	0.45 inch
Bargraph	For current representation
Resolution	For energy : 0.1k, 1k (depending upon CT rating) For Power, Voltage, Current : Auto resolution For Power factor : 0.001

Input specifications

Type of measurement	TRUE RMS
Sampling rate	100 Samples / Cycle
Electrical connections	3Ø - 4 wire (Wye), 1Ø - 2 wire (L-N)
Data update rate	1 sec
Input-voltage	
PT primary	100V to 500kV (Programmable for any value)
PT secondary	173V to 415V (Programmable for any value)
Voltage nominal	240VAC L-N / 415V AC L-L
Measured V with full range	60 to 300V AC, 50 / 60Hz, Self- Supplied, (V1, N)
Impedance	≥0.8MΩ
Frequency range	45 - 65Hz
VA burden	<0.2VA at 300V AC L-N / Phase
Input Current	
CT ratings primary	5A to 10kA (Programmable for any value)
CT ratings Secondary	330mV
Current nominal	330mV
Measured Amps with over range & Crest Factor	3.3mV to 396mV
Measurement accuracy	
Current	±0.5% of F.S.
Voltage	±0.5% of F.S.
Power Factor	±0.01
Power	1%
Frequency	±0.1% For L - N Voltage >20V, For L - L Voltage >35V
Active Energy	1%
Reactive Energy	1%
THD & Individual Harmonic, V&A	Up to 31st Level

Output specifications

Pulse output	Voltage range : External 24V DC max Current capacity : 100mA max Configurable pulse weight from 1 to 9999000 pulses / kWh
Device ID & Parity	1 to 255 & None, Odd, Even
Protocol & Interface	RS485 and MODBUS RTU
Baud rate	300, 600, 1200, 2400, 4800, 9600, 19200 baud
Transmission mode	Half duplex
Transmission distance	500 meter maximum
Transmission speed	300, 600, 1200, 2400, 4800, 9600, 19200 baud
Stop bits	1 or 2
Response time	100ms (max and independent of baud rate)
Isolation	2kV RMS

Mechanical specifications

Weight	230gms (8Oz)
Material	LEXAN 923-7035 GRAY
IP degree of protection	(IEC 60529) IP51 Front Only
Torque at terminals	0.68N-m to 0.79 N-m
Mounting position	Din Rail

Auxiliary supply specifications

Supply voltage	60 to 300V AC, 50 / 60Hz, Self - Supplied, (V1, N)

Environmental specifications

Operating temperature	Meter 0°C to +50°C (32°F to +122°F)
Storage temperature	Meter -20°C to +75°C (-4°F to +167°F)
Humidity	85% non-condensing
Altitude	Up to 2000 meters (6561 ft.)
Measurement category	CAT III
Pollution degree	2

Dimensions (All are in mm)

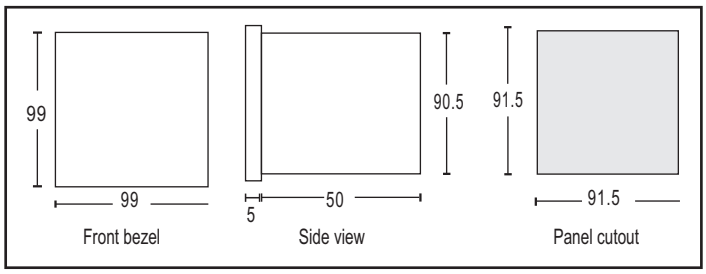

Terminal connection

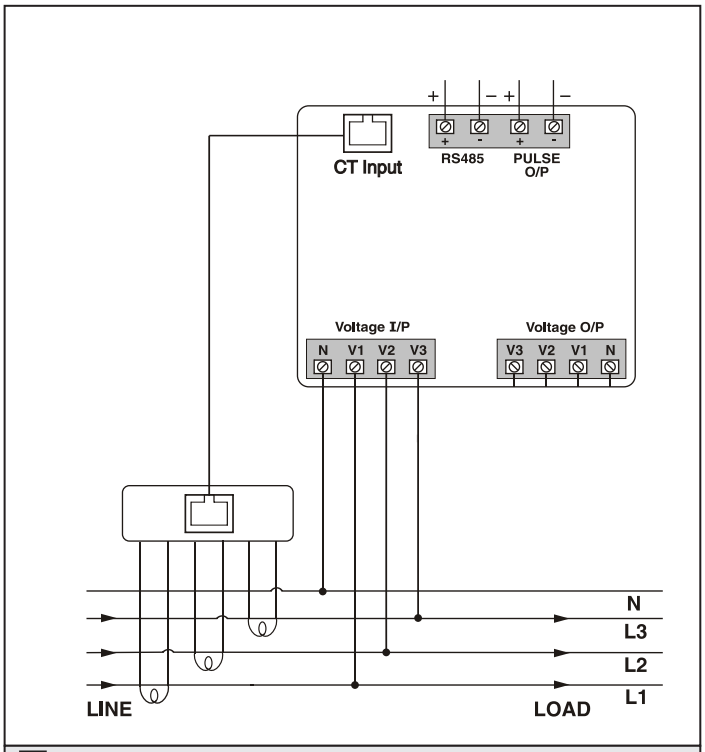

Cable Size (mm²) : 0.5 to 2.5 ; Tightening Torque (N - m) : 0.68 to 0.79

Compliance

Applicable EMI / EMC Standards	
Product Standard : IEC 61326 - 1	
Category	**Standards compliance**
Electrostatic discharge	IEC 61000 - 4 - 2
Immunity to electromagnetic RF fields	IEC 61000 - 4 - 3
Conducted immunity	IEC 61000 - 4 - 6
Immunity to magnetic fields	IEC 61000 - 4 - 8
Immunity to voltage dips and interruptions	IEC 61000 - 4 - 11
Fast transient	IEC 61000 - 4 - 4
Immunity to surge waves	IEC 61000 - 4 - 5
Conducted and radiated emissions	CISPR-22 / CISPR-11
Safety and Standards	
IEC61010 Edition 3.0 CAT III, Protection class II	
IEC 61326 - 1	

Ordering information

Product code	Supply voltage	Output		Certification
MRJ385-G-PNW	Self Supplied (V1, N) 60 to 300V AC	Pulse output	Comm. (RS485)	CE