selec

PPRD-4M-3-415V
Operating Instructions

OP682-V01

FEATURES

- Dry Run/Under Current, Over Current, Locked Current, Current Asymmetry, Over Voltage, Under Voltage, Voltage Asymmetry, Phase Failure, Phase Sequence and Monitors
  Over Load (As per NEMA curve) in 3Ø system
- Trip Time Delay, Recovery Time Delay
- Adjustable Hysteresis Band
- Start & Stop Function by Push Button

SPECIFICATIONS

DISPLAY
3 Digits, Seven Segment LED Display

ELECTRICAL CONNECTION
3Ø-3 wire

OPERATING RANGE
280 - 500VAC (L-L)

FREQUENCY RANGE
50 - 60Hz

VA RATING
40VA max

CURRENT MEASUREMENT RANGE
2CT for R,Y,B Phase and Range From
3A - 80A (Depends on MPCT selected)

VOLTAGE MEASURING RANGE
280 - 500 VAC (L-L)

TRIP PARAMETERS
Overload : NEMA Class : 5,10,15,20,30

Rated Current:
10A CT : 3A-10A
40A CT : 11A-40A
80A CT : 24A-80A

Over Current :
10A CT : (I_R+1)A to 60A
40A CT : (I_R+1)A to 240A
80A CT : (I_R+1)A to 480A
[I_R = Rated current] & Step size : 1A

Under Current :
10A CT : 1A to (I_R-1)A
40A CT : 5A to (I_R-1)A
80A CT : 10A (I_R-1)A
[I_R = Rated current] & step size : 1A

Locked Current :
10A CT : (I_R+1)A to 60A
40A CT : (I_R+1)A to 240A
80A CT : (I_R+1)A to 480A
[I_R = Rated current] & Step size : 1A

Current Asymmetry :
1A to (I_R-1)A
[I_R = Rated current] & step size : 1A

Over Voltage :
280VAC - 500VAC (L-L)

Under Voltage :
280VAC - 500VAC (L-L)

Voltage Asymmetry :
10V - 50V

Phase Failure :
Yes

Phase Sequence :
Yes

RESOLUTION
Current : <10A = 0.01
>10A = 0.1

ACCURACY
Voltage : ±1% of 500V ± 1digit
Current : ±5% of I_R ± 1digit
Time : ±5% ± 100msec

TIME SETTINGS
Power ON Delay : 1sec (Fixed)
Trip Time Delay : 0 - 999sec
(Current & Voltage Parameters)
Phase Failure : Instantaneous
Phase Reversal : Instantaneous
Reset Time : 1-999sec for Current & Voltage parameters
Response Time : <240ms
Reset Attempts : 3 (Fixed)
Reset Attempt Time Frame : 1 - 999 mins
Auto diagnostic present

HYSTERESIS
Voltage : 0 -10V
(Not applicable for Current parameters)

OUTPUT SPECIFICATIONS
1 Relay : 1C/O (SPDT)

RELAY RATING
NO (5A, 250V AC/28VDC)
NC (3A, 250V AC/28VDC)

LED INDICATION
LED1 (Red) : Relay(Continuously ON after trip)
LED2 (Green): Pump(ON when Pump ON)

LED INDICATION CHART

Various Conditions	'R' LED	'PUMP' LED
Healthy	OFF	OFF
Healthy & Motor ON	OFF	ON
Trip	ON	OFF

TST/RST FUNCTION :
TST : Relay Energized
RST : Relay De-energized

ENVIRONMENTAL SPECIFICATIONS
- Indoor use
- Altitude of up to 2000 meters
- Pollution degree II

Temperature : Operating : 0 to 55°C
Storage : -20 to 70°C
Humidity : Up to 95% RH, non-condensing

MECHANICAL SPECIFICATIONS
No. of Push Buttons : 3
Mounting : Din Rail Mount
Wire Size (max) : 4 sq.mm
Screw tightening torque : 0.5 N-M

WEIGHT: 220gms (approx.)

ORDER CODE INFORMATION

Product	Supply	Certification	
		CE	c UL us LISTED
PPRD-4M-3-415V	280V - 500V	—	—

ACCESSORIES

PRODUCT	SUPPLY	CERTIFICATION
MPCT D15 10A	10A	- - -
MPCT D15 40A	40A	- - -
MPCT D15 80A	80A	- - -

SAFETY PRECAUTIONS

All safety related codifications, symbols and instructions that appear in this operating manual or on the equipment must be strictly followed to ensure the safety of the operating personnel as well as the instrument.

If the equipment is not used in a manner specified by the manufacturer it might impair the protection provided by the equipment.

☛ Read complete instructions prior to installation and operation of the unit.

WIRING GUIDELINES

WARNING

1. To prevent the risk of electric shock power supply to the equipment must be kept OFF while doing the wiring arrangement.
2. Wiring shall be done strictly according to the terminal layout with shortest connections. Confirm that all connections are correct.

CAUTION

1. To ensure the safe operation of unit, check the wiring and connections.
2. It is recommended to test the unit periodically to satisfy the regulations.

TERMINAL CONNECTIONS

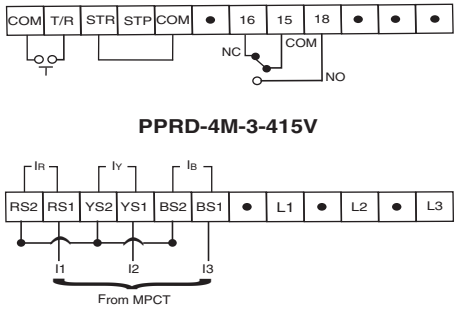

(Note : I_1,I_2 & I_3 to be connected to terminals in MPCT)

CONFIGURATION MENU

Press ↑ + ↓ for 3sec. to enter or exit configuration menu.

Press ↵ to save and scroll through sub menu		Press ↑ or ↓ to enter and change parameter value		
DISPLAY	**DESCRIPTION**	**DEFAULT VALUE**	**RANGE**	**CONDITION**
rt.C	Rated Current	10	3A - 10A (CT : 10A) 11A - 40A (CT : 40A) 24A - 80A (CT : 80A)	Default value will be as per selected range of CT selection
CFG	Config Settings	no	YES / NO	If configuration setting is 'YES', then other pages / settings will be displayed.
Ct.S	CT Selection	10	3A - 10A (Default : 10A) 11A - 40A (Default : 40A) 24A - 80A (Default : 80A)	Default value will be as per selected range
OLr	Over Load	5	Class 5, 10, 15, 20, 30 (Starts with disable)	
OC	Over Current	20	(Ir+1)A to 60A (Default : 20A) (Ir+1)A to 240A (Default : 80A) (Ir+1)A to 480A (Default : 160A) (Starts with disable)	This parameter is only applicable when motor is already started
UC	Under Current	5	1A to (Ir-1)A (Default : 5A) 5A to (Ir-1)A (Default : 20A) 10A to (Ir-1)A (Default : 40A) (Starts with disable)	This parameter is only applicable when motor is already started
LC	Locked Current	20	(Ir+1)A to 60A (Default : 20A) (Ir+1)A to 240A (Default : 80A) (Ir+1)A to 480A (Default : 160A) (Starts with disable)	This parameter is only applicable during motor start condition
CA	Current Asymmetry	2	1A to (Ir-1)A (Starts with disable)	This parameter is only applicable when motor is already started
OV	Over Voltage	480	280V to 500V (Starts with disable)	Over Voltage cannot be less than Under Voltage
UV	Under Voltage	350	280V to 500V (Starts with disable)	Under Voltage cannot be greater than Over Voltage
VA	Voltage Asymmetry	30	10V to 50V (Starts with disable)	
PH.L	Phase Loss	Enb	Enable / Disable	
PH.S	Phase Sequence	Enb	Enable / Disable	
Vt.H	Voltage Hysteresis	6	0V to 10V	This parameter is applicable for Voltage parameter

DISPLAY	DESCRIPTION	DEFAULT VALUE	RANGE	CONDITION
trP	Trip Time	1	0 to 999 sec	This parameter is applicable for Voltage and Current parameter
rEC	Recovery Time	5	1 to 999 sec	This parameter is applicable for Voltage and Current parameter
LCH	Latch	on	ON / OFF	If Latch is ON, user has to reset the unit manually when fault is removed
rC.t	Rapid Cycle Time	30	1 to 999 mins	Enable only if Auto mode selected
FCt	Factory Default	no	YES / NO	

KEY Function	
CURRENT	Current value is shown in online mode.
TEST	Press ↑ key for 3sec to enter in test mode.
RESET	Press ↓ key for 3sec to reset manually.
VOLTAGE	Press ↵ key to view voltage value in online mode and after releasing current value is displayed.
TRIP VALUE	Press ↑ key for 3sec. to display trip value.

NOTE :
- In configuration menu, if no key pressed for 30 sec. Then unit resumes to online page.
- All Voltage and Current Parameters Tripping will be as per Average values of voltage and Current.
- Unit will show OVR when current is greater than 10 times of rated current.
- Unit will not show current less than 10% of full load current (Depends on MPCT selected)
- TEST/RESET function to be performed before turning ON Pump/Start key press & ensure application is disconnected from unit.

MECHANICAL INSTALLATION/DIMENSION (in mm)

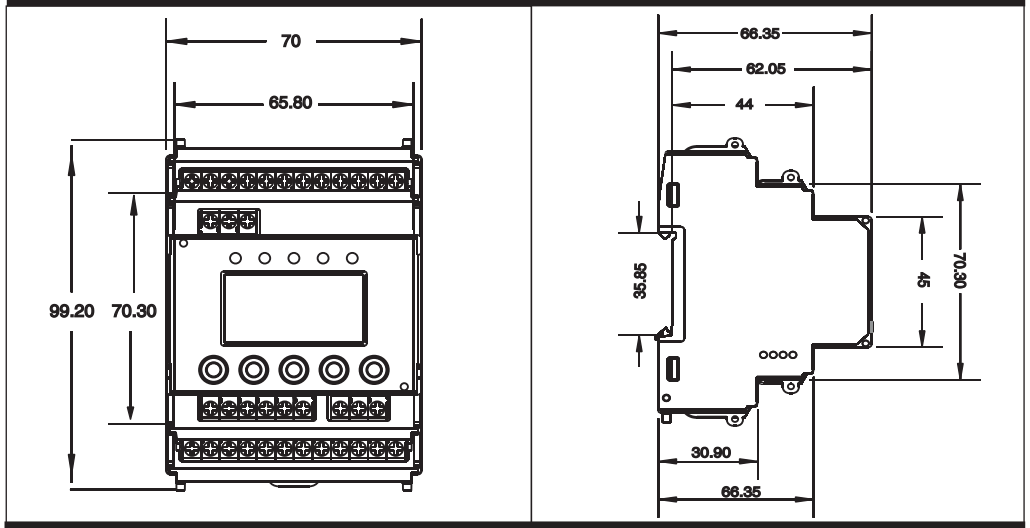

CT DIMENSIONS (All dimensions in mm)

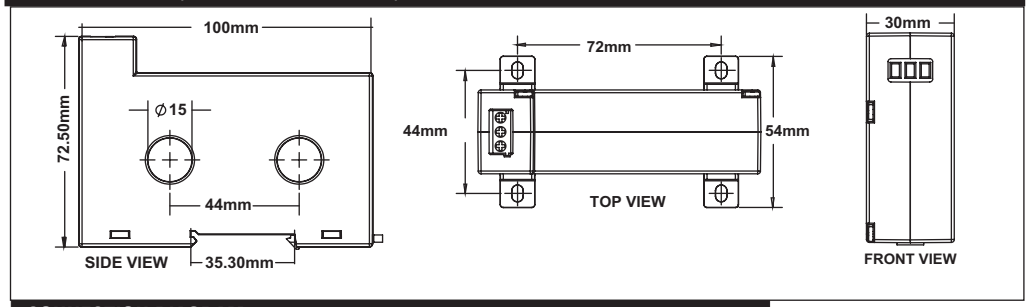

CONNECTION DIAGRAM

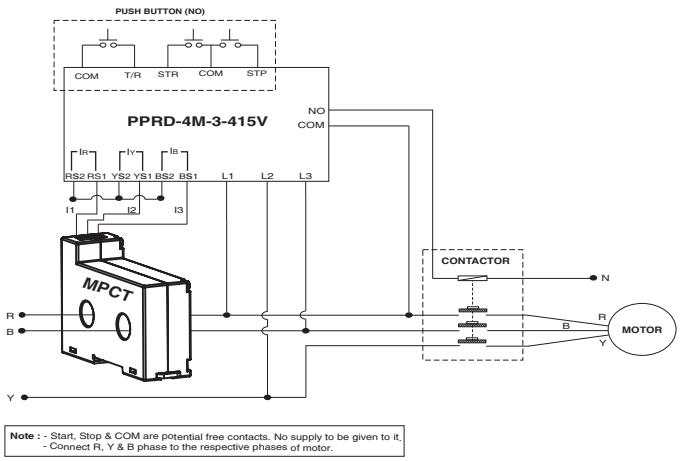

Note : - Start, Stop & COM are potential free contacts. No supply to be given to it.
- Connect R, Y & B phase to the respective phases of motor.

WARRANTY / LIMITATIONS OF LIABILITY

Selec warrants the products to be free from defects in the materials and workmanship for a period of one year (or other period specified, if any) from the date of sale by Selec.

The warranty does not apply to defects resulting from any action of the buyer, including but not limited to improper handling, operating the product outside the specification limits or unauthorized disassembling / altering of the product. The warranty shall be VOID if the product shows evidence of having been tampered or being damaged due to usage in corrosive environment ; or current, heat, moisture or vibration ; improper specification ; wrong usage in an application; misuse or other operating conditions outside of Selec's control.

Selec shall not be responsible for special, indirect or consequential damages, loss of profits or commercial loss in any way connected with the products, whether such claim is based on contract, warranty, negligence or strict liability.

In no event shall the responsibility of Selec for any act exceed the individual price of the product on which liability is asserted.

In no event shall Selec be responsible for warranty or other claims regarding the products unless Selec's analysis confirms that the products were properly handled, stored, installed and maintained and not subject to contamination, abuse, misuse or inappropriate modification or repair.

(Specifications are subject to change, since development is a continuous process)

Selec Controls Pvt. Ltd., India

Factory Address :
EL-27/1, Electronic Zone, TTC Industrial Area, MIDC, Mahape,
Navi Mumbai - 400 710, INDIA.
Tel. No. : +91-22-41 418 419/430 I Fax No. : +91-22-28471733
Toll free : 1800 227 353 (BSNL/MTNL Subscribers only)
Website : www.selec.com I Email : sales@selec.com