Features :

- 3 digits, 7 segment LED single display
- TC/ RTD inputs
- ON - OFF/ PID control
- Single set point
- °C/°F selectable
- Field selectable control output (Relay or SSR)

96 x 96mm

72 x 72mm

Technical specifications

Display	3 digits, 7 Segment digital display
Height of display	TC203AX - 13.5mm, TC303AX - 14mm
LED indication	R: Control output ON
Inputs	Thermocouple (J, K, T, R, S)/ RTD (PT100)
Resolution	Fixed 1°
Indication accuracy	For J, K & T inputs: 0.25% of F.S. ±1° For R & S inputs: 0.5% of F.S. ±2° (20 min of warm up time for TC inputs) For RTD inputs: 0.1% of F.S. ±1° (F.S. = Full scale)
Temperature unit	°C/°F selectable
Input filter (FTC)	0.2 to 10.0sec
Sampling time	250 ms
Control output (Relay or SSR user selectable)	
Relay contact (SPDT)	Main Output: NO: 10A 250 VAC/ 24 VDC NO/ NC: 5A/ 5A 250 VAC/ 24 VDC (Except TC303A)
SSR drive (Voltage pulse)	12 VDC, 50 mA
Control action	1) PID Control with auto tuning 2) ON-OFF control
Proportional band (P)	1.0 to 400°C
Integral time (I)	0.0 to 99.9 min
Derivative time (D)	0 to 999 sec
Cycle time	0.1 to 99.9 sec
Hysteresis width	0.1 to 99.9°
Manual reset value	-19.9 to 19.9°
Supply voltage	90 to 270 VAC/ DC (AC : 50/ 60Hz)
Power consumption	5 VA max @ 230 VAC
Temperature	Operating: 0°C to 50°C (32 to 122°F); Storage: - 20°C to 75°C (- 4 to 167°F)
Humidity (non - condensing)	95% RH
Mounting	Panel
Weight	TC203AX - 180 gms ; TC303AX - 240 gms

Terminal connections

TC203AX

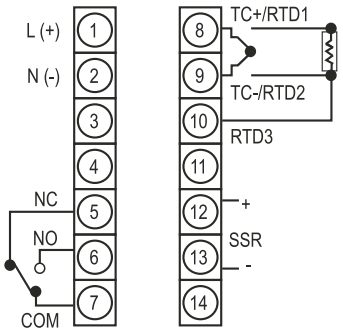

TC303AX

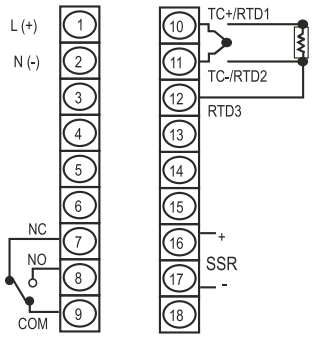

TC303A

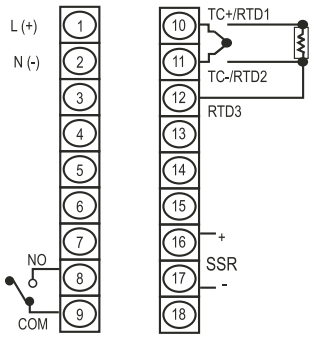

Dimensions (All are in mm)

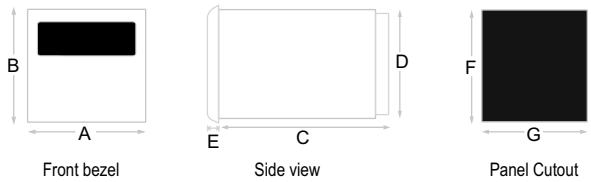

DIM	A	B	C	D	E	F	G
TC203AX	76	76	83.7	67	4.5	69	69
TC303AX / TC303A	100	100	73	90.5	5	92	92

Ordering information

TC203AX	RELAY (10A)	SSR (12 VDC)	90 to 270 VAC/ DC	**- - -**
TC303AX	RELAY (10A)	SSR (12 VDC)	90 to 270 VAC/ DC	**- - -**
TC303A	RELAY (10A)	SSR (12 VDC)	90 to 270 VAC/ DC	**- - -**