Terminal Connections

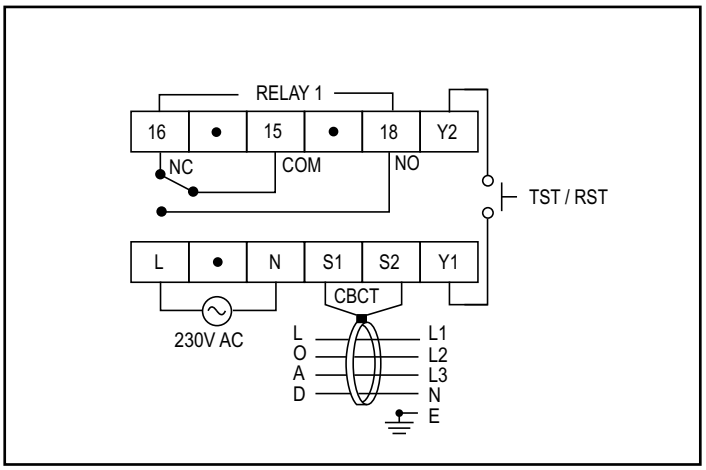

Compliance

Category	Reference Standards	Testing Level
Conducted Emissions	CISPR-11	Class-A
Conducted Susceptibility	IEC 61000-4-6	Class-A
Electrical Fast Transient	IEC 61000-4-4	Class-A
Electrostatic Discharge	IEC 61000-4-2	Class-A
Radiated Emission	IEC 61000-4-20	Class-A
Radiated Susceptibility	IEC 61000-4-3	Class-A
Surge	IEC 61000-4-5	Class-B
AC Voltage Test	IEC 61010-1	Clause 6.7
Resistance To Heat Test	IEC 61010-1	Clause 10.5
Single Fault Test	IEC 61010-1	Clause 4.4 and 10
Temperature Rise Test	IEC 61010-1	Clause 10.1 - 10.4

Ordering Information

Accessories

Product Code