Communication

Insulation

Environmental Specifications

Mechanical

Termination

Dimensions (All are in mm)

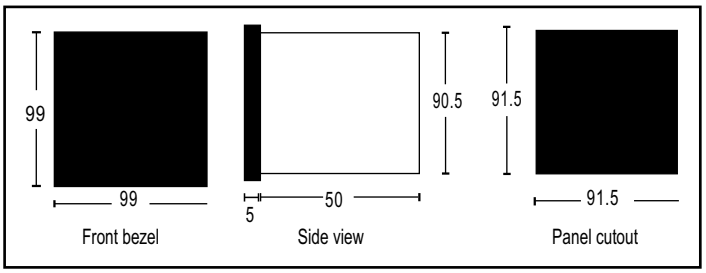

Terminal connection

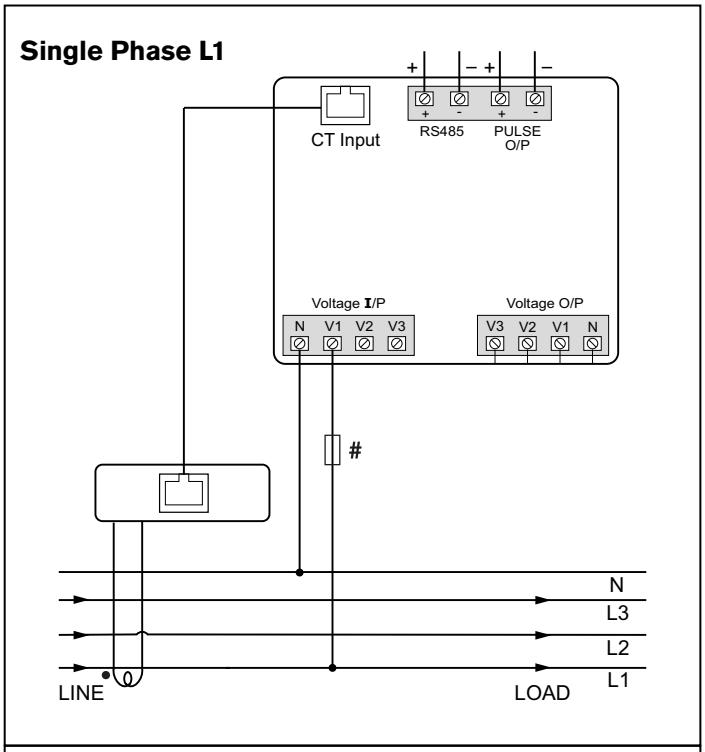

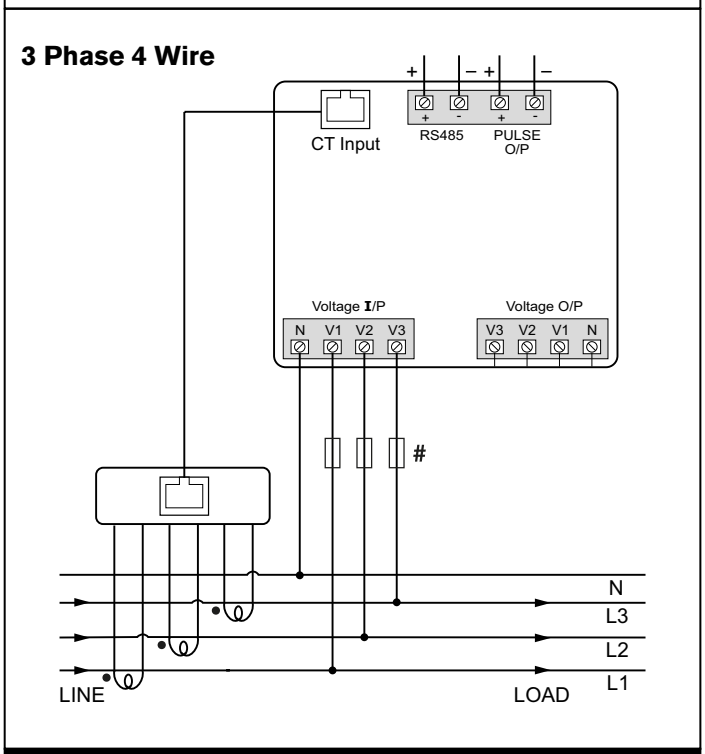

Conformity

Electromagnetic compatibility
IEC/EN61326-1, IEC/EN55011 Class A
IEC/EN61000-4-2, -3, -4, -5, -6, -8, -11
IEC/EN50470-1/3
Accuracy and functionality
IEC/EN50470-1/3
IEC/EN62053-21
IEC/EN62053-23
DIRECTIVE 2014/32/EU
IEC/EN62053-31
Safety
IEC/EN61010

Ordering information

MID CE