72 x 72mm

96 x 96mm

Features :

- 3 digits, 7 segment LED single display
- TC (J, K) input
- ON - OFF control
- Single set point
- °C/°F selectable
- Control output: Relay
- Short depth

Technical specifications

Display	3 digits, 7 Segment LED single display
Height of display	13.5 mm
LED indication	R: Control output ON
Inputs	Thermocouple (J, K)
Resolution	Fixed 1°
Indication accuracy	0.25% of F.S ±1 (20 min of warm up time)
Temperature unit	°C/°F selectable
Input filter (FTC)	0.2 to 10.0 sec
Sampling time	250 ms
Relay contact (SPST)	Main Output: NO :10A 250 VAC/ 24 VDC NO/ NC: 5A/ 5A 250 VAC/ 24 VDC
Control action	ON-OFF control
Hysteresis width	0.1 to 99.9°
Display bias	- 19.9 to 19.9°
Supply voltage	90 to 270 VAC/ DC (AC: 50/ 60Hz)
Power consumption	4 VA max
Temperature	Operating: 0°C to 50°C (32 to 122°F); Storage: - 20°C to 75°C (- 4 to 167°F)
Humidity (non - condensing)	95% RH
Mounting	Panel
Weight	180 gms

Terminal connections

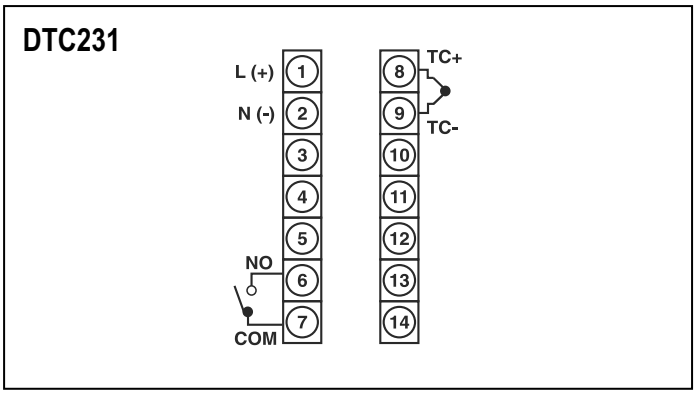

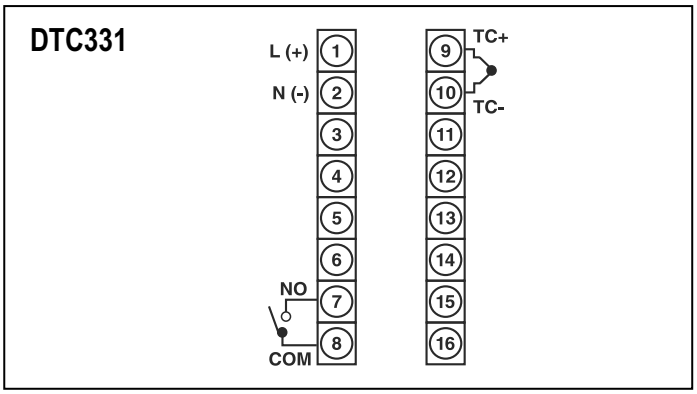

Dimensions (All are in mm)

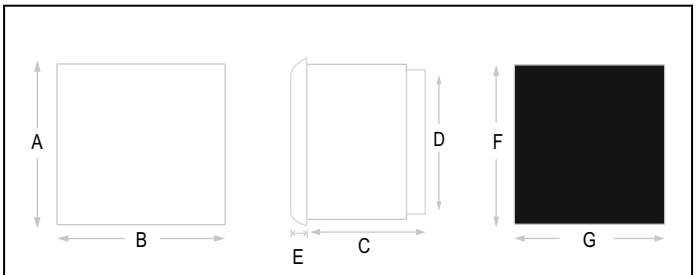

Front bezel | Side view | Panel Cutout

DIM	A	B	C	D	E	F	G
DTC231	76	76	44	67	4.5	69	69
DTC331	99	99	39	90.5	3.5	92	92

Ordering information

DTC231	RELAY (10A)	90 to 270V AC / DC	- - -
DTC331	RELAY (10A)	90 to 270V AC / DC	- - -