**Features :**

**Single set point**

**LED Indications : Relay ON**

**2 C/O SPDT**

**48 x 48mm**

## Technical specifications

| | |
|---|---|
| Display | 3 digits, 7 segment LED |
| LED indication | Relay ON |
| Accuracy | Setting: ± 0.05% of set time or 50msec ; Repeat: ± 0.05% |
| Start input | Gate/ Pulse (Programmable) |
| Contact rating | Relay: NO: 10A 250 VAC/ 24 VDC<br>NO/ NC: 5A/ 5A 250 VAC/ 24VDC |
| Relay contact | 2X SPDT |
| Modes | ON delay, Interval, Cyclic ON first, Cyclic OFF first |
| Time ranges | 0 - 9.99sec, 0 - 99.9sec, 0 - 999sec, 0 - 9:59min: sec,<br>0 - 99.9min, 0 - 999min, 0 - 9:59hr: min, 0 - 99.9hr, 0 - 999hr |
| Resolution | 0.01sec |
| Counting direction | Down |
| Set point | 1 |
| Time setting | By keys on front panel |
| Reset | Front, Remote, On power interruption |
| Memory | No |
| Configuration lock | No |
| Supply voltage | 90 to 270 VAC (50/ 60Hz), - 15% to 10% tolerance |
| Power consumption | 4VA max |
| Temperature | Operating: 0 to 50ºC (32 to 122ºF)<br>Storage: - 20 to 75ºC (- 4 to 167ºF) |
| Humidity (non - condensing) | 95% RH |
| Mounting | Panel mount |
| Weight | 160 gms |

## Terminal connections

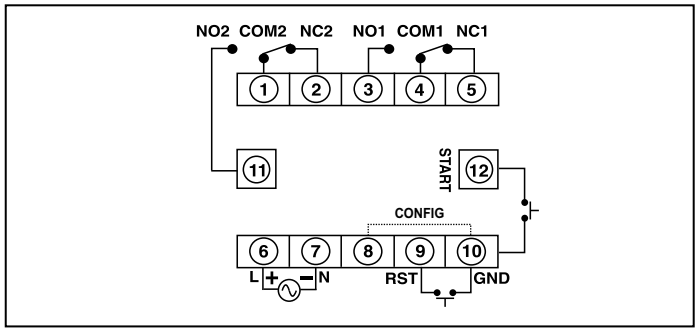


## Dimensions (All are in mm)

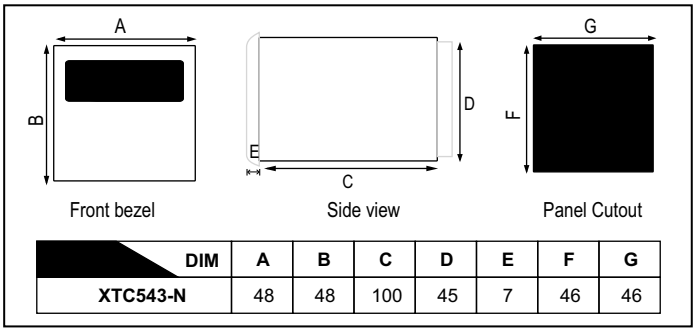


| DIM | A | B | C | D | E | F | G |
|---|---|---|---|---|---|---|---|
| **XTC543-N** | 48 | 48 | 100 | 45 | 7 | 46 | 46 |

## Ordering information

| | | |
|---|---|---|
| **XT543-N** | 90 to 270 VAC/ DC | - - - |