48 x 48mm

Features :

- 4+4 Digits, 7 Segment LED dual display
- TC/ RTD input
- ON - OFF/ PID control
- °C/°F selectable
- Heat cool PID
- Ramp soak
- Soft start
- Retransmission analog output
- Max 3 set point

Technical specifications

Display	4+ 4 digits 7 Segment LED dual display
Height of display	Upper display: 10mm, Lower display: 7mm
LED indication	Relay ON, Alarm, Manual mode, Tune
Inputs	Thermocouple (J, K, T, R, S, C, E, B, N, L, U, W, Platinel II), RTD (PT100)
Resolution	1/ 0.1 for TC/ RTD only (fixed 1° resolution for R & S type TC)
Indication accuracy	For TC inputs: 0.25% of F.S. ±1° For R & S type TC inputs: 0.5% of F.S. ±2° (20 min of warm up time for TC inputs) For RTD inputs: 0.1% of F.S. ±1° (F.S. = Full scale)
Temperature unit	°C/°F selectable
Input filter (FTC)	0.2 to 10.0 sec
Sampling time	200 ms
Control output (Optional)	1
Contact rating (SPST)	5A @ 230 VAC/ 30 VDC, resistive
SSR drive (Voltage pulse)	12 VDC, 20 mA
Current	4 to 20mA DC (loop impedance: 500Ω max)
Voltage	0 to 10 VDC (load resistance: 10KΩ min)
Auxiliary output (Optional)	2
Contact rating (SPST)	5A @ 230 VAC/ 30 VDC, resistive
Retransmission	
Current	0/ 4 to 20mA DC (loop impedance: 500Ω max)
Voltage	0 to 10 VDC (load resistance: 10KΩ min)
Update rate	100 msec
Control action	1) PID Control 2) ON-OFF control
Proportional band (P)	1.0 to 400.0°C
Integral time (I)	0 to 3600 sec
Derivative time (D)	0 to 200 sec
Cycle time	0.1 to 100.0 sec
Hysteresis width	0.1 to 99.9°
Manual reset value	- 19.9 to 19.9°
Heat-cool	
Control action	PID
Proportional band-cool	0.0 to 400.0°
Cycle time-cool	0.1 to 100 sec
Dead band	Programmable from set point low limit to set point high limit.

Settings for alarm output	
Modes	Deviation high/ low, Absolute high/ low, Band, Sensor break
Hysteresis	0.1 to 99.9°
Ramp soak	
Ramp rate	1 to 9999°/ hr
Soak time	0 to 1440 min
Soft start time	0 to 999 min
Supply voltage	90 to 270 VAC/ DC (50/ 60Hz)
Power consumption	6 VA max @ 230 VAC
Temperature	Operating: 0°C to 50°C (32 to 122°F); Storage: 20°C to 75°C (- 4 to 167°F)
Humidity (non - condensing)	95% RH
Mounting	Panel
Weight	180 gms

Terminal connections

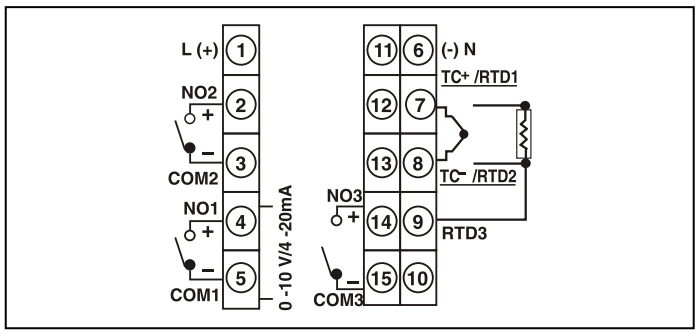

Dimensions (All are in mm)

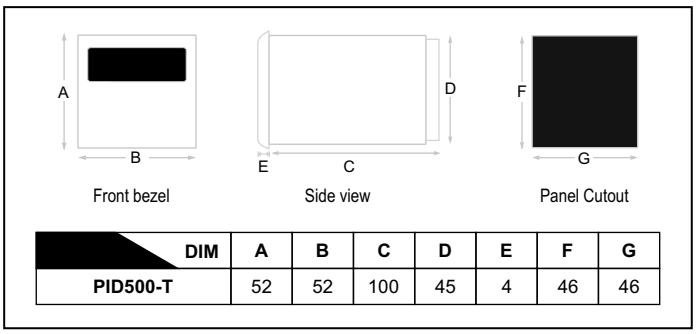

DIM	A	B	C	D	E	F	G
PID500-T	52	52	100	45	4	46	46

Ordering information

PID500-T-2-0-00	4- 20mA (current)	RELAY (5A)	**- - -**	90 to 270 VAC/ DC	**- - -**
PID500-T-0-0-01	RELAY	RELAY (5A)	RELAY (5A)	90 to 270 VAC/ DC	**- - -**
PID500-T-1-0-01	SSR	RELAY (5A)	RELAY (5A)	90 to 270 VAC/ DC	**- - -**